Instructions - Parts List

FDA SERIES Diaphragm Pumps

3A4551A

EN

SPFG10 and SPFG15 Models

For use in sanitary applications. For professional use only.

Important Safety Instructions
Read all warnings and instructions in this manual. Save these instructions.

See page 3 for approval information.

120 psi (0.8 MPa, 8 bar) Maximum Fluid Working Pressure
120 psi (0.8 MPa, 8 bar) Maximum Air Input Pressure

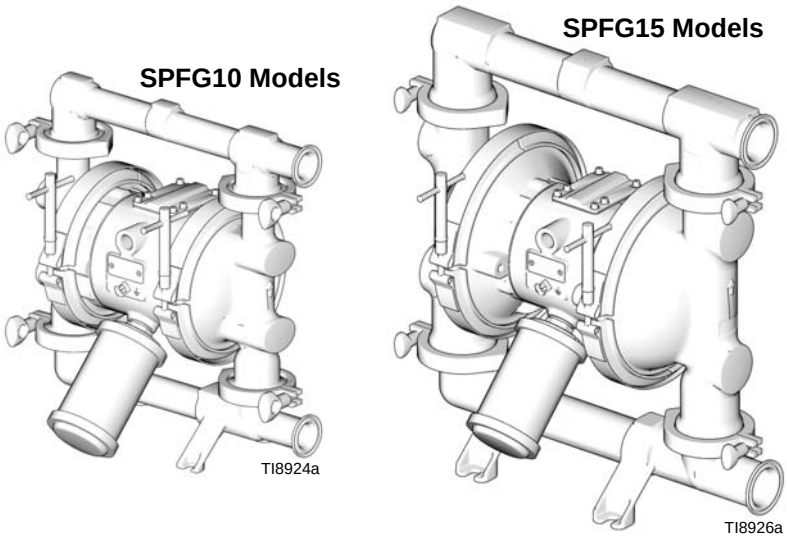

Contents

Models

Model	Description	Seats	O-Rings	Balls	Diaphragms	Approvals
SPFG10SSP	**1” FDA AODD pump**	**SST**	**PTFE**	**PTFE**	PTFE	CE Ex **II 2 G c T6**
SPFG15SSP	**1.5” FDA AODD pump**					
SPFG10SST	**1” FDA AODD pump**				Overmolded PTFE	
SPFG15SST	**1.5” FDA AODD pump**					
SPFG10SSS	**1” FDA AODD pump**			**Santoprene**	Santoprene	CE Ex **II 2 G c T6**
SPFG15SSS	**1.5” FDA AODD pump**					

Warnings

The following warnings are for the setup, use, grounding, maintenance, and repair of this equipment. The exclamation point symbol alerts you to a general warning and the hazard symbol refers to procedure-specific risk. When these symbols appear in the body of this manual, refer back to these Warnings. Additional, product-specific warnings may be found throughout the body of this manual where applicable.

⚠ WARNING

FIRE AND EXPLOSION HAZARD

Flammable fumes, such as solvent and paint fumes, in **work area** can ignite or explode. Paint or solvent flowing through the equipment can cause static sparking. To help prevent fire and explosion:

- Use equipment only in well ventilated area.
- Eliminate all ignition sources; such as pilot lights, cigarettes, portable electric lamps, and plastic drop cloths (potential static sparking).
- Ground all equipment in the work area. See **Grounding** instructions.
- Keep work area free of debris, including solvent, rags and gasoline.
- Do not plug or unplug power cords, or turn power or light switches on or off when flammable fumes are present.
- Use only grounded hoses.
- **Stop operation immediately** if static sparking occurs or you feel a shock**.** Do not use equipment until you identify and correct the problem.
- Keep a working fire extinguisher in the work area.
- Route exhaust away from all ignition sources. If diaphragm ruptures, fluid may be exhausted with air.

TOXIC FLUID OR FUMES HAZARD

Toxic fluids or fumes can cause serious injury or death if splashed in the eyes or on skin, inhaled, or swallowed.

- Read Safety Data Sheet (SDS) to know the specific hazards of the fluids you are using.
- Route exhaust away from work area. If diaphragm ruptures, fluid may be exhausted into the air.
- Store hazardous fluid in approved containers, and dispose of it according to applicable guidelines.

⚠ WARNING

PRESSURIZED EQUIPMENT HAZARD

Fluid from the equipment, leaks, or ruptured components can splash in the eyes or on skin and cause serious injury.

- Follow the **Pressure Relief Procedure** when you stop spraying/dispensing and before cleaning, checking, or servicing equipment.
- Tighten all fluid connections before operating the equipment.
- Check hoses, tubes, and couplings daily. Replace worn or damaged parts immediately.

EQUIPMENT MISUSE HAZARD

Misuse can cause death or serious injury.

- Do not operate the unit when fatigued or under the influence of drugs or alcohol.
- Do not exceed the maximum working pressure or temperature rating of the lowest rated system component. See **Technical Data** in all equipment manuals.
- Use fluids and solvents that are compatible with equipment wetted parts. See **Technical Data** in all equipment manuals. Read fluid and solvent manufacturer's warnings. For complete information about your material, request Safety Data Sheet (SDS) from distributor or retailer.
- Do not leave the work area while equipment is energized or under pressure.
- Turn off all equipment and follow the **Pressure Relief Procedure** when equipment is not in use.
- Check equipment daily. Repair or replace worn or damaged parts immediately with genuine manufacturer's replacement parts only.
- Do not alter or modify equipment. Alterations or modifications may void agency approvals and create safety hazards.
- Make sure all equipment is rated and approved for the environment in which you are using it.
- Use equipment only for its intended purpose. Call your distributor for information.
- Route hoses and cables away from traffic areas, sharp edges, moving parts, and hot surfaces.
- Do not kink or over bend hoses or use hoses to pull equipment.
- Keep children and animals away from work area.
- Comply with all applicable safety regulations.

Installation

General Information

- The typical installations shown in Figs. 2-4 are only guides for selecting and installing system components. Contact your Standard Pump distributor for assistance in planning a system to suit your needs.
- Always use genuine Standard Pump parts and accessories.
- Reference numbers and letters in parentheses refer to the callouts in the figures and the parts lists on pages 26-27 and 32-33.

The pump is very heavy (see Technical Data on pages 29 and 35 for specific weights). If the pump must be moved, follow the pressure relief procedure on page 11 and have two people to lift the pump by grasping the outlet manifold securely or use appropriate lifting equipment.

To reduce the risk of serious injury due to burns, insulate and/or label the pump before pumping hot fluids.

Tightening Clamps Before First Use

After you unpack the pump, and before you use it for the first time, check all clamps and tighten as necessary.

Grounding

The equipment must be grounded. Grounding reduces the risk of static and electric shock by providing an escape wire for the electrical current due to statis build up or in the event of a short circuit.

- *Pump*: Connect a ground wire and clamp as shown in Fig. 1. Loosen the grounding screw (W). Insert one end of a 12 ga (1.5 mm²) minimum ground wire (Y) behind the grounding screw and tighten the screw securely. Connect the clamp end of the ground wire to a true earth ground. Order Part No. 400-295 Ground Wire and Clamp.

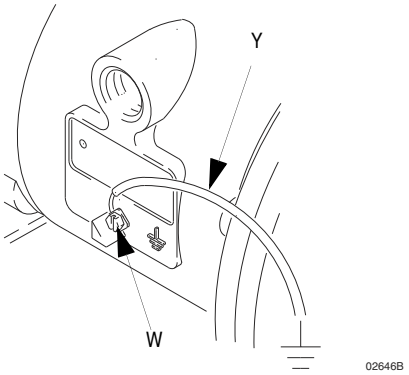

FIG. 1

- *Fluid hoses*: Use only grounded hoses with a maximum of 500 ft. (150 m) combined hose length to ensure grounding continuity.
- *Air compressor*: Follow the manufacturer's recommendations.
- *All solvent pails used when flushing:* Follow the local code. Use only metal pails, which are conductive. Do not place the pail on a non-conductive surface, such as paper or cardboard, which interrupts the grounding continuity.
- *Fluid supply container:* Follow the local code.

Mountings

NOTICE

The pump exhaust air may contain contaminants. Ventilate to a remote area if the contaminants could affect your fluid supply. See **Air Exhaust Ventilation** on page 10.

- Be sure the mounting surface can support the weight of the pump, hoses, and accessories, as well as the stress caused during operation.
- For all mountings, be sure the pump is bolted directly to the mounting surface.
- For ease of operation and service, mount the pump so the air valve cover (2), air inlet, and fluid inlet and outlet ports are easily accessible.

Air Line

A bleed-type master air valve (B) is required in the system to relieve air trapped between this valve and the pump. Trapped air can cause the pump to cycle unexpectedly, which could result in serious injury, including splashing in the eyes or on the skin, injury from moving parts, or contamination from hazardous fluids. See FIG. 2.

1. Install the air line accessories as shown in FIG. 2. Mount these accessories on the wall or on a bracket. Be sure the air line supplying the accessories is grounded.
   a. Install an air regulator (C) and gauge to control the fluid pressure. The fluid outlet pressure will be the same as the setting of the air regulator.
   b. Locate one bleed-type master air valve (B) close to the pump and use it to relieve trapped air. See the **WARNING** above. Locate the other master air valve (E) upstream from all air line accessories and use it to isolate them during cleaning and repair.
   c. The air line filter (F) removes harmful dirt and moisture from the compressed air supply.

In the step below, do not connect the quick-disconnect coupler (D) on the air hose to the mating fitting on the pump until you are ready to operate the pump. Connecting the coupler too early can result in unintentional operation of the pump, leading to serious injury from moving parts, splashing fluid in the eyes or on the skin, and contact with hazardous fluids.

2. Install a grounded, flexible air hose (A) between the accessories and the 1/2 npt(f) pump air inlet (N). See Fig. 5. Use a minimum 3/8 in. (9.5 mm) ID air hose. Screw an air line quick disconnect coupler (D) onto the end of the air hose (A), and screw the mating fitting into the pump air inlet snugly.

Fluid Suction Line

1. Use flexible, grounded fluid hoses.
2. For best sealing results, use a standard tri-clamp sanitary gasket of a flexible material such as EPDM, Buna-N, fluoroelastomer, or silicon.
3. If the fluid inlet pressure to the pump is more than 25% of the outlet working pressure, the ball check valves will not close fast enough, resulting in inefficient pump operation.
4. At inlet fluid pressures greater than 15 psi (0.1 MPa, 1 bar), diaphragm life will be shortened.
5. See the **Technical Data** on pages 29 and 35 for maximum suction lift (wet and dry).

Fluid Outlet Line

A fluid drain valve (J) is required to relieve pressure in the hose if it is plugged. The drain valve reduces the risk of serious injury, including splashing in the eyes or on the skin, or contamination from hazardous fluids when relieving pressure. Install the valve close to the pump fluid outlet. See FIG. 2.

1. Use flexible grounded fluid hoses (L).
2. For best sealing results, use a standard tri-clamp sanitary gasket of a flexible material such as EPDM, Buna-N, fluoroelastomer, or silicon
3. Install a fluid drain valve (J) near the fluid outlet. See the **WARNING** above, and FIG. 2.
4. Install a shutoff valve (K) in the fluid outlet line.

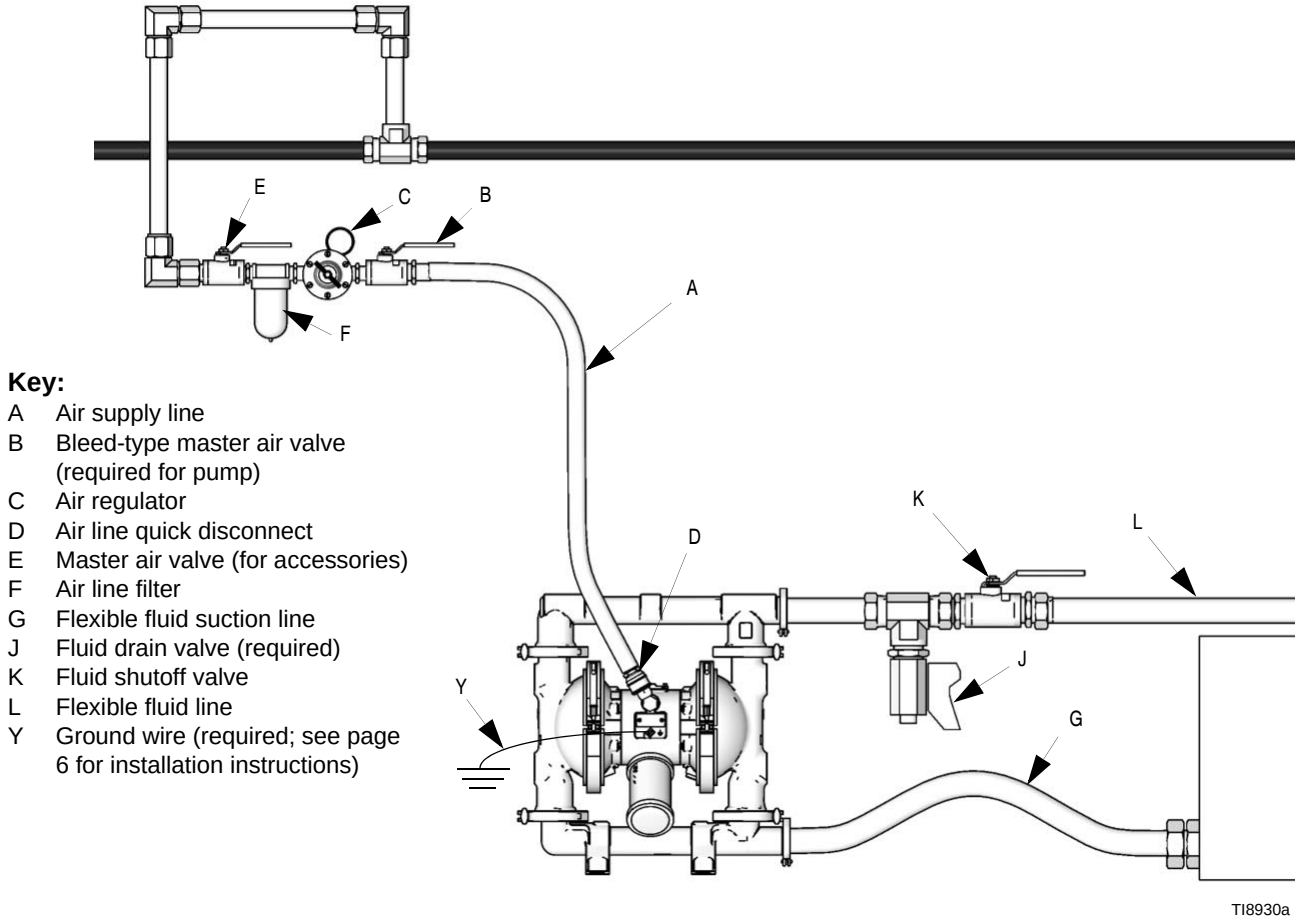

Key:

A Air supply line
B Bleed-type master air valve (required for pump)
C Air regulator
D Air line quick disconnect
E Master air valve (for accessories)
F Air line filter
G Flexible fluid suction line
J Fluid drain valve (required)
K Fluid shutoff valve
L Flexible fluid line
Y Ground wire (required; see page 6 for installation instructions)

FIG. 2 Typical Floor-Mount Installation

Changing the Orientation of the Fluid Inlet and Outlet Ports

The pump is shipped with the ports facing the same direction. To reverse the orientation of the ports:

1. Remove the clamps holding the inlet and/or outlet manifold to the covers.

2. Reverse the manifold and reattach. Install and tighten clamps snugly.

Key:

N 1/2 npt(f) air inlet port
P Muffler (air exhaust port is 3/4 npt(f)
R Fluid inlet port
S Fluid outlet port
113 Manifold clamps
3 Air valve screws

⚠1 Torque to 28-30 in-lb (3.2-3.7 N•m)

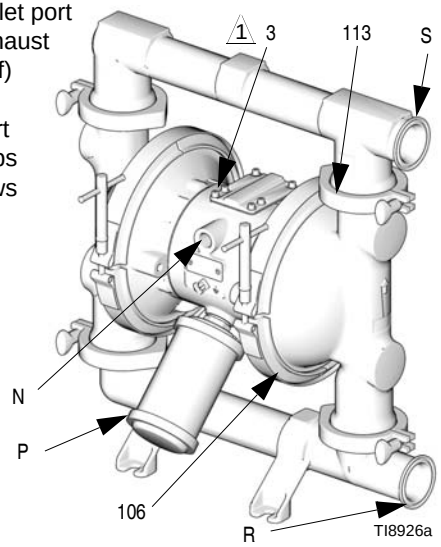

FIG. 3

Air Exhaust Ventilation

Be sure the system is properly ventilated for your type of installation. When pumping flammable or hazardous fluids, you must vent the exhaust to a safe place, away from people, animals, food handling areas, and all sources of ignition.

Diaphragm failure will cause the fluid being pumped to exhaust with the air. Place an appropriate container at the end of the air exhaust line to catch the fluid. See FIG. 4.

The air exhaust port is 3/4 npt(f). Do not restrict the air exhaust port. Excessive exhaust restriction can cause erratic pump operation.

To provide a remote exhaust:

1. Remove the muffler (P) from the pump air exhaust port.
2. Install a grounded air exhaust hose (T) and connect the muffler (P) to the other end of the hose. The minimum size for the air exhaust hose is 3/4 in. (19 mm) ID. If a hose longer than 15 ft (4.57 m) is required, use a larger diameter hose. Avoid sharp bends or kinks in the hose.
3. Place a container (U) at the end of the air exhaust line to catch fluid in case a diaphragm ruptures. See FIG. 4.

Key:

A Air supply line
B Bleed-type master air valve (required for pump)
C Air regulator
D Air line quick disconnect
E Master air valve (for accessories)
F Air line filter
P Muffler
T Grounded air exhaust hose
U Container for remote air exhaust

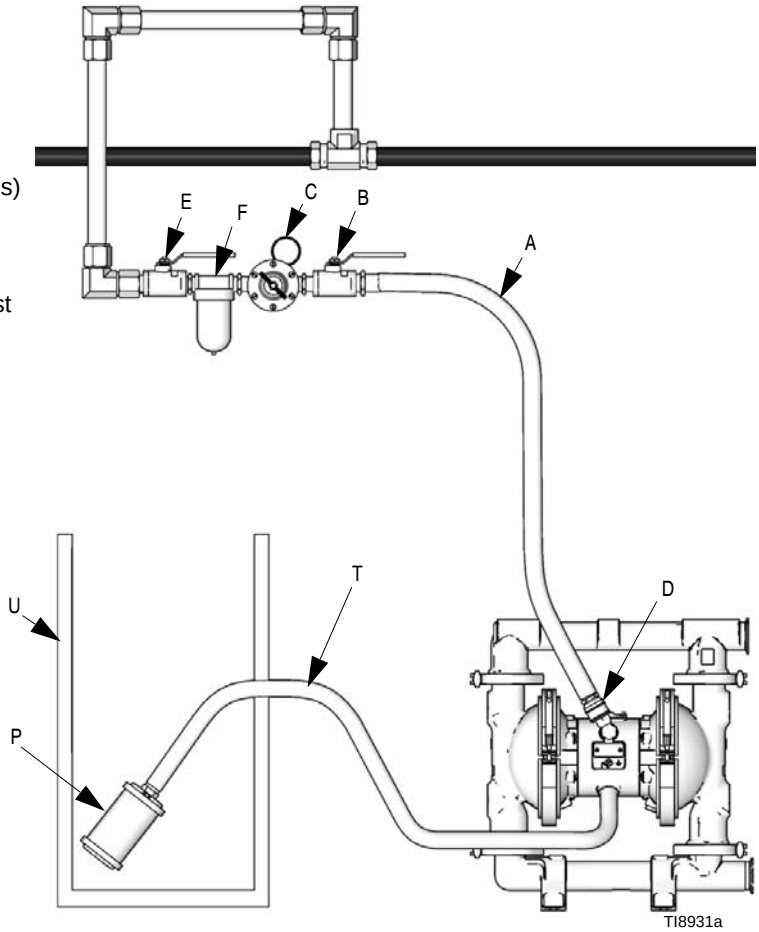

FIG. 4 Venting Exhaust Air

Operation

Pressure Relief Procedure

The equipment stays pressurized until pressure is manually relieved. To reduce the risk of serious injury from pressurized fluid or splashing fluid, follow this procedure whenever you stop pumping and before cleaning, checking, or servicing equipment.

1. Shut off the air to the pump.
2. Open the dispensing valve, if used.
3. Open the fluid drain valve to relieve fluid pressure, having a container ready to catch the drainage.

Sanitize the Pump Before First Use

It is the user's responsibility to properly sanitize the pump before first use. It is up to the user whether this will include disassembling and cleaning individual parts or simply flushing pump with a sanitizing solution. As necessary, follow the steps under **Starting and Adjusting the Pump** below, under the **Service** section on page 15, or under **Flushing** on page 12.

To avoid serious injury from splashing fluid, never move or lift a pump under pressure. If dropped, the fluid section may rupture. Always follow the **Pressure Relief Procedure** before lifting the pump.

Starting and Adjusting the Pump

1. Be sure the pump is properly grounded. Refer to **Grounding** on page 4.
2. Check connections to be sure they are tight. Tighten fluid inlet and outlet connections securely.
3. Place the suction tube (if used) in fluid to be pumped.

NOTE: If fluid inlet pressure to the pump is more than 25% of outlet working pressure, the ball check valves will not close fast enough, resulting in inefficient pump operation.

4. Place the end of fluid hose (L) into an appropriate container.
5. Close the fluid drain valve (J).
6. Back out the air regulator (C) knob, and open all bleed-type master air valves (B, E).
7. If the fluid hose has a dispensing device, hold it open while continuing with the following step.
8. Slowly increase air pressure with the air regulator (C) until the pump starts to cycle. Allow the pump to cycle slowly until all air is pushed out of the lines and the pump is primed.

Pump Shutdown

At the end of the work shift, follow the **Pressure Relief Procedure**.

Maintenance

Lubrication

The air valve is designed to operate unlubricated, however if lubrication is desired, every 500 hours of operation (or monthly) remove the hose from the pump air inlet and add two drops of machine oil to the air inlet.

NOTICE

Do not over-lubricate the pump. Oil is exhausted through the muffler and could contaminate your fluid supply or other equipment. Excessive lubrication can also cause the pump to malfunction.

Flushing

Insert suction tube into cleaning solution. Open air regulator to supply low pressure air to the pump. Run the pump long enough to thoroughly clean the pump and hoses. Close the air regulator. Remove the suction tube from the cleaning solution and drain pump. Place suction tube in the fluid to be pumped.

Flush the pump often enough to prevent the fluid you are pumping from drying or freezing in the pump and damaging it. Flushing schedule will be based on what the pump is being used for. Use a compatible cleaning solution and always cycle the pump during the entire flushing process.

Always flush the pump and relieve the pressure before storing it for any length of time.

Tightening Connections

Before each use, check all hoses for wear or damage, and replace as necessary. Check to be sure all connections are tight and leak-free.

Preventive Maintenance Schedule

Establish a preventive maintenance schedule, based on the pump's service history. This is especially important for prevention of spills or leakage due to diaphragm failure.

Troubleshooting

- Follow the **Pressure Relief Procedure** on page 11.
- Check all possible problems and causes before disassembling the pump.

PROBLEM	CAUSE	SOLUTION
Pump cycles at stall or fails to hold pressure at stall.	Worn check valve balls (301), seats (201) or o-rings (202).	Replace. See 17.
Pump will not cycle, or cycles once and stops.	Air valve is stuck or dirty.	Disassemble and clean air valve. See page 15. Use filtered air.
	Check valve ball (301) severely worn and wedged in seat (201) or manifold (102 or 103).	Replace ball and seat. See page 17.
	Check valve ball (301) is wedged into seat (201), due to overpressurization.	Install Pressure Relief Valve (see page 10).
	Dispensing valve clogged.	Relieve pressure and clear valve.
Pump operates erratically.	Clogged suction line.	Inspect; clear.
	Sticky or leaking balls (301).	Clean or replace. See page 17.
	Diaphragm ruptured.	Replace. See pages 18-20.
	Restricted exhaust.	Remove restriction.
Air bubbles in fluid.	Suction line is loose.	Tighten.
	Diaphragm ruptured.	Replace. See pages 18-20.
	Loose inlet manifold (102), damaged seal between manifold and seat (201), damaged o-rings (202).	Tighten manifold clamps (113), or replace seats (201) or o-rings (202). See page 17.
	Loose diaphragm shaft bolt (107).	Tighten or replace (pages 18-20).
	Damaged o-ring (108).	Replace. See pages 18-20.
Chattering - noisy operation.	Check valve balls do not seat properly/cleanly due to imbalance between fluid inlet and outlet line sizing. Noise is accentuated with light viscosity fluids.	Reduce size/diameter of inlet line relative to outline line. Outlet line size should not exceed pump size.

PROBLEM	CAUSE	SOLUTION
Leak in inlet or outlet sanitary fitting.	Loose sanitary clamp.	Tighten clamp.
	Damaged or worn gasket.	Replace gasket.
	Misalignment of inlet/outlet hose or pipe.	Use flexible hoses at pump inlet and outlet.
	Gasket does not seal.	Use a standard sanitary gasket of flexible material such as EPDM, Buna-N, fluoroelastomer, or silicon.
Fluid in exhaust air.	Diaphragm ruptured.	Replace. See pages 18-20.
	Loose diaphragm shaft bolt (107).	Tighten or replace. See pages 18-20.
	Damaged o-ring (108).	Replace. See pages 18-20.
Pump exhausts excessive air at stall.	Worn air valve block (7), o-ring (6), plate (8), pilot block (18), u-cups (10), or pilot pin o-rings (17).	Repair or replace. See page 15.
	Worn shaft seals (402).	Replace. See pages 18-20.
Pump leaks air externally.	Air valve cover (2) or air valve cover screws (3) are loose.	Tighten screws. See page 15.
	Air valve gasket (4) or air cover gasket (22) is damaged.	Inspect; replace. See pages 15, 22-23.
	Air cover screws (25) are loose.	Tighten screws. See pages 22-23.
Pump leaks fluid externally from ball check valves.	Loose manifolds (102, 103), damaged seal between manifold and seat (201), damaged o-rings (202).	Tighten manifold clamps (113), or replace seats (201) or o-rings (202). See page 17.

Service

Repairing the Air Valve

Tool Required

- Torque wrench
- Torx (T20) screwdriver or 7 mm (9/32 in.) socket wrench
- Needle-nose pliers
- O-ring pick
- Lithium base grease

NOTE: Air Valve Repair Kits are available. Order Kit 400-002. Parts included in the kit are marked with †. Use all the parts in the kit for the best results.

Disassembly

1. Relieve the pressure.

2. With a Torx (T20) screwdriver or 7 mm (9/32 in.) socket wrench, remove the six screws (3), air valve cover (2), and gasket (4). See FIG. 5.

3. Move the valve carriage (5) to the center position and pull it out of the cavity. Remove the valve block (7) and o-ring (6) from the carriage. Using a needle-nose pliers, pull the pilot block (18) straight up and out of the cavity. See FIG. 6.

4. Pull the two actuator pistons (11) out of the bearings (12). Remove the u-cup packings (10) from the pistons. Pull the pilot pins (16) out of the bearings (15). Remove the o-rings (17) from the pilot pins. See FIG. 7.

5. Inspect the valve plate (8) in place. If damaged, use a Torx (T20) screwdriver or 7 mm (9/32 in.) socket wrench to remove the three screws (3). Remove the valve plate (8). See FIG. 8.

6. Inspect the bearings (12, 15) in place. See FIG. 7. The bearings are tapered and, if damaged, must be removed from the outside. This requires disassembly of the fluid section. See page 23.

7. Clean all parts and inspect for wear or damage. Replace as needed. Reassemble.

Reassembly

NOTE: When instructed to lubricate, apply appropriate waterproof Sanitary Lubricant (such as Standard Pump 400-294).

1. *If you replaced the bearings (12, 15),* reinstall as explained on page 23. Reassemble the fluid section.

2. Install the valve plate (8†) in the cavity, seal down. Install the three screws (3), using a Torx (T20) screwdriver or 7 mm (9/32 in.) socket wrench. Tighten until the screws bottom out on the housing. See FIG. 8.

3. Install an o-ring (17†) on each pilot pin (16). Grease the pins and o-rings. Insert the pins into the bearings (15), ***narrow*** end first. See FIG. 7.

4. Install a u-cup packing (10†) on each actuator piston (11), so the lips of the packings face the ***narrow*** end of the pistons. See FIG. 7.

5. Lubricate the u-cup packings (10†) and actuator pistons (11). Insert the actuator pistons in the bearings (12), ***wide*** end first. Leave the narrow end of the pistons exposed. See FIG. 7.

6. Grease the lower face of the pilot block (18†) and install so its tabs snap into the grooves on the ends of the pilot pins (16). See FIG. 6.

7. Grease the o-ring (6†) and install it in the valve block (7†). Push the block onto the valve carriage (5). Grease the lower face of the valve block. See FIG. 6.

8. Install the valve carriage (5) so its tabs slip into the grooves on the narrow end of the actuator pistons (11). See FIG. 6.

9. Align the valve gasket (4†) and cover (2) with the six holes in the center housing (1). Secure with six screws (3), using a Torx (T20) screwdriver or 7 mm (9/32 in.) socket wrench. Torque to 52-60 in-lb (5.6-6.8 N•m). See FIG. 5.

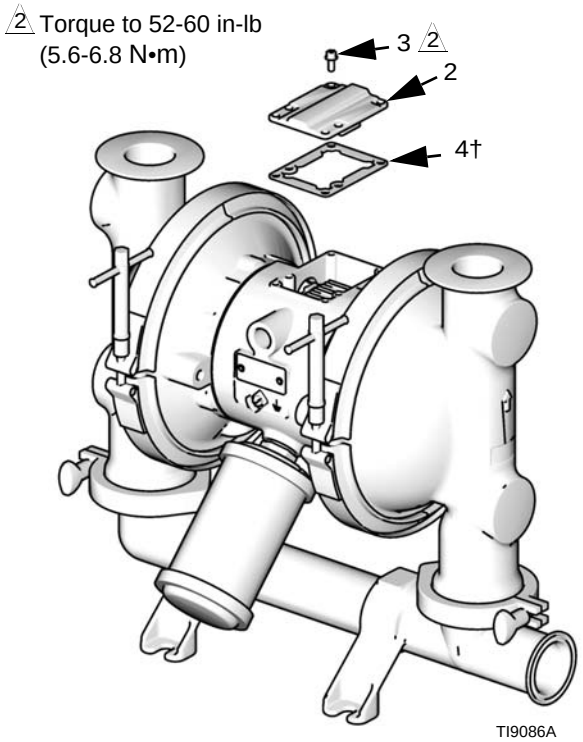

FIG. 5

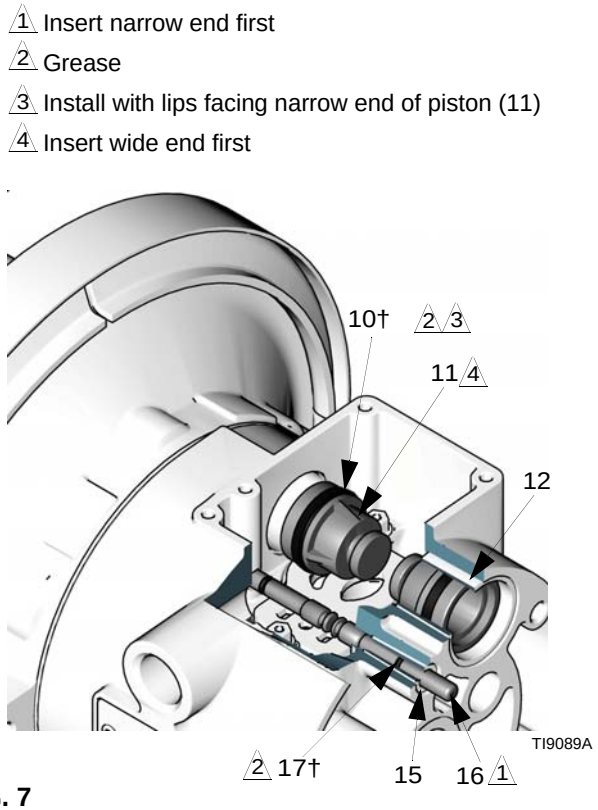

FIG. 7

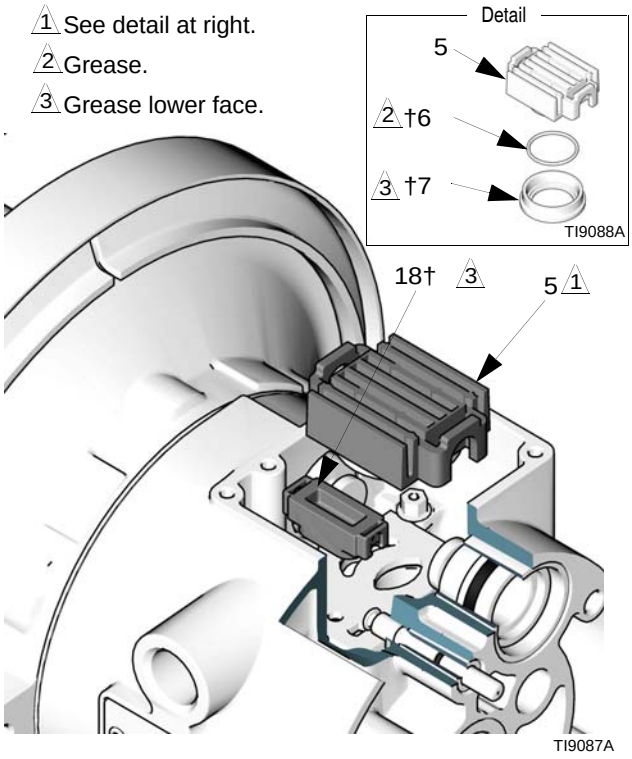

FIG. 6

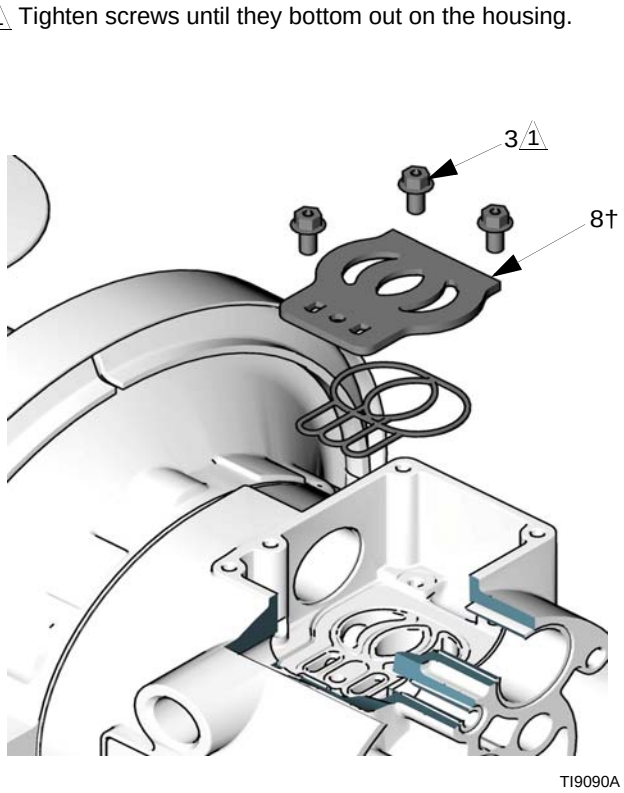

FIG. 8

Ball Check Valve Repair

Tools Required

- O-ring pick

Disassembly

NOTE:

- A Fluid Section Repair Kit is available. Refer to the Repair Kit Matrix parts section for the appropriate pump size so that the correct kit for your pump is ordered. Parts included in the kit are marked with an asterisk, for example (202*). Use all the parts in the kit for the best results.

- To ensure proper seating of the balls (301), always inspect the seats (201) when replacing the balls. Replace seats as necessary if seating surface shows evidence of wear. Also, replace the o-rings (202) as necessary. PTFE o-rings should be replaced every time manifolds are removed.

1. Relieve the pressure. Disconnect all hoses.
2. Remove the pump from its mounting.
3. Remove the clamps (106) holding the outlet manifold (103) to the fluid covers (101). See FIG. 9.
4. Remove the o-rings (202), seats (201), and balls (301) from the manifold (103).
5. Turn the pump over and remove the inlet manifold (102). Remove the o-rings (202), seats (201), and balls (301) from the fluid covers (101).

Reassembly

1. Clean all parts and inspect for wear or damage. Replace parts as needed.
2. Reassemble in the reverse order, following all notes in FIG. 9. Be sure the ball checks and manifolds are assembled **exactly** as shown. The arrows (A) on the fluid covers (101) **must** point toward the outlet manifold (103).

1 Arrow (A) must point toward outlet manifold (103)

2 Radiused seating surface must face the ball (301). Large chamfer on O.D. must face o-ring.

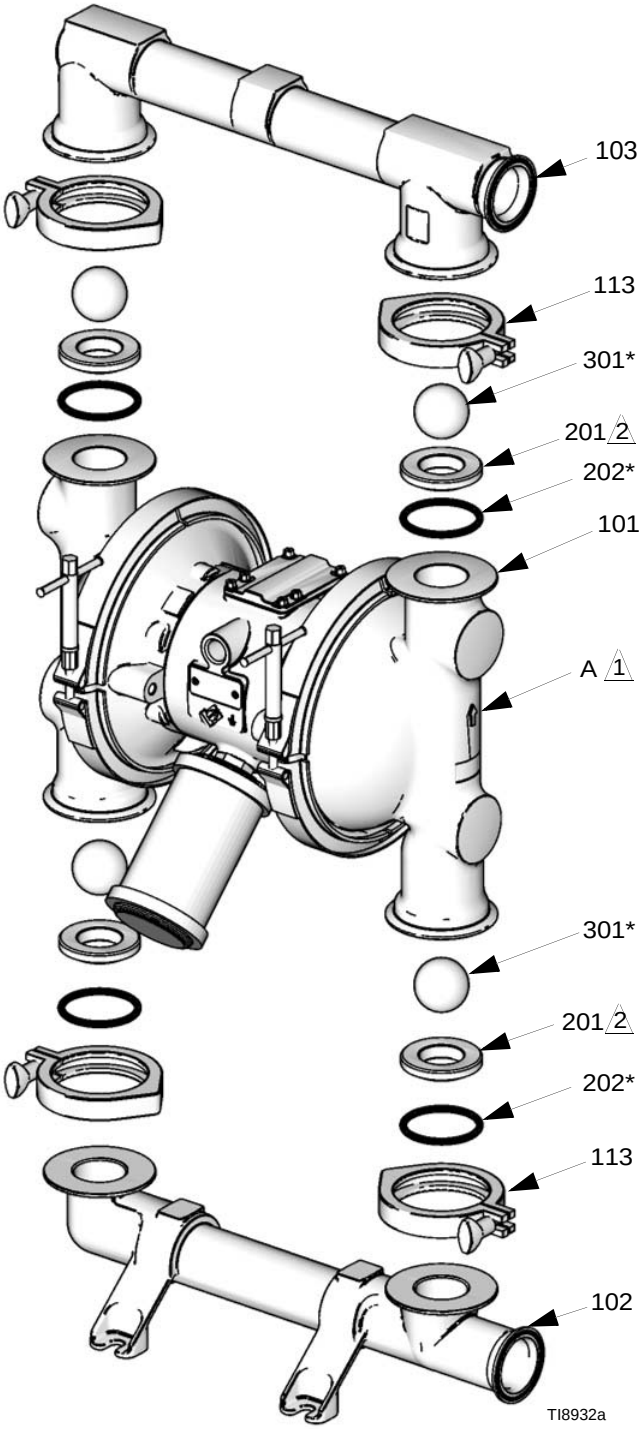

FIG. 9

Standard Diaphragm Repair

NOTE: If your pump uses overmolded diaphragms, see page 21.

Tools Required

- Torque wrench
- 15 mm socket wrench
- 19 mm open end wrench
- O-ring pick
- Lithium-base grease

Disassembly

NOTE: A Fluid Section Repair Kit is available. Refer to page 25 or 31 to order the correct kit for your pump. Parts included in the kit are marked with an asterisk, for example (401*). Use all the parts in the kit for the best results.

1. Relieve the pressure.
2. Remove the manifolds and disassemble the ball check valves as explained on page 17.
3. Remove the clamps (106) holding the fluid covers (101) to the air covers (23). Pull the fluid covers (101) off the pump. See FIG. 10.

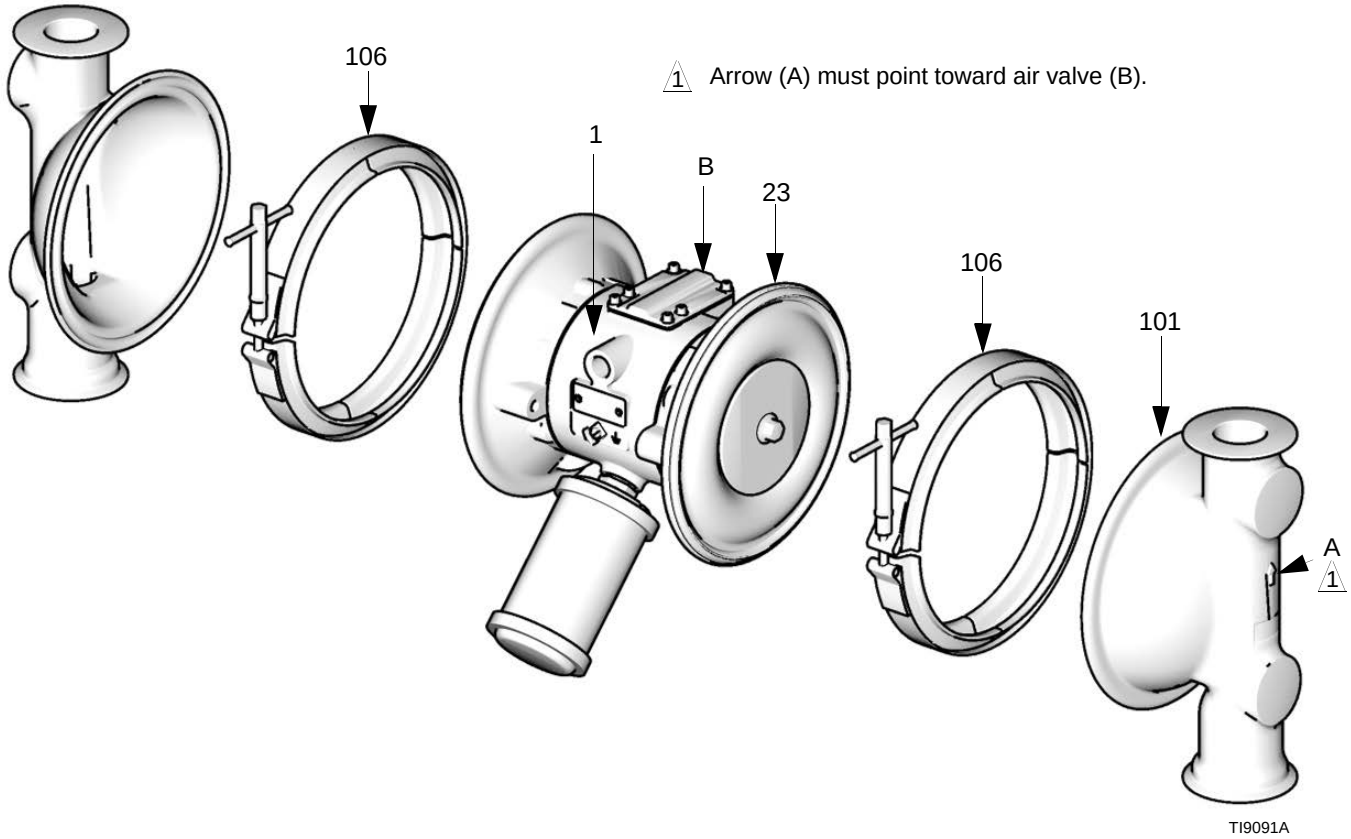

FIG. 10

4. Loosen but do not remove the diaphragm shaft bolts (107), using a 15 mm socket wrench on both bolts. See FIG. 11.

5. Unscrew one bolt from the diaphragm shaft (24) and remove the o-ring (108), fluid side diaphragm plate (105), diaphragm (403), backer (401) used only on PTFE models, and air side diaphragm plate (104). See FIG. 11.

6. Pull the other diaphragm assembly and the diaphragm shaft (24) out of the center housing (1). Hold the shaft flats with a 19 mm open end wrench, and remove the bolt (107) from the shaft. Disassemble the remaining diaphragm assembly.

7. Inspect the diaphragm shaft (24) for wear or scratches. If it is damaged, inspect the bearings (19) in place. If the bearings are damaged, refer to page 23.

8. Reach into the center housing (1) with an o-ring pick and hook the u-cup packings (402), then pull them out of the housing. This can be done with the bearings (19) in place.

9. Clean all parts and inspect for wear or damage. Replace parts as needed.

Reassembly

1. Install the shaft u-cup packings (402*) so the lips face ***out*** of the housing (1). Lubricate the packings. See FIG. 11.

2. Install the diaphragm assembly on one end of the shaft (24) as follows:

   a. Install the o-ring (108*) on the shaft bolt (107).

   b. Install the fluid side diaphragm plate (105) on the bolt so the rounded side faces the diaphragm (401).

NOTE: The fluid side diaphragm plate (105) is stainless steel. This plate ***is not*** stamped with its part number. Be sure to install this plate on the fluid side of the diaphragm.

   c. Install the diaphragm (403*). Make certain the side marked AIR SIDE faces the center housing (1).

   d. On PTFE models only, install the backer (401*) on the bolt. Make certain the side marked AIR SIDE faces the center housing (1).

   e. Install the air side diaphragm plate (104) so the rounded side faces the diaphragm (401). This plate is stamped with its part number.

   f. Apply medium-strength (blue) Loctite® or equivalent to the bolt (107) threads. Screw the bolt into the shaft (24) hand tight.

3. Grease the length and ends of the diaphragm shaft (24), and slide it through the housing (1).

4. Assemble the other diaphragm assembly to the shaft as explained in step 2.

5. Hold one shaft bolt (107) with a wrench and torque the other bolt to 60-70 ft-lb (81-95 N•m) at 100 rpm maximum.

6. Align the fluid covers (101) and the center housing (1) so the arrows (A) on the covers face the same direction as the air valve (B). Secure covers with the clamps. See FIG. 10.

7. Reassemble the ball check valves and manifolds as explained on page 17.

Cutaway view, with diaphragms in place

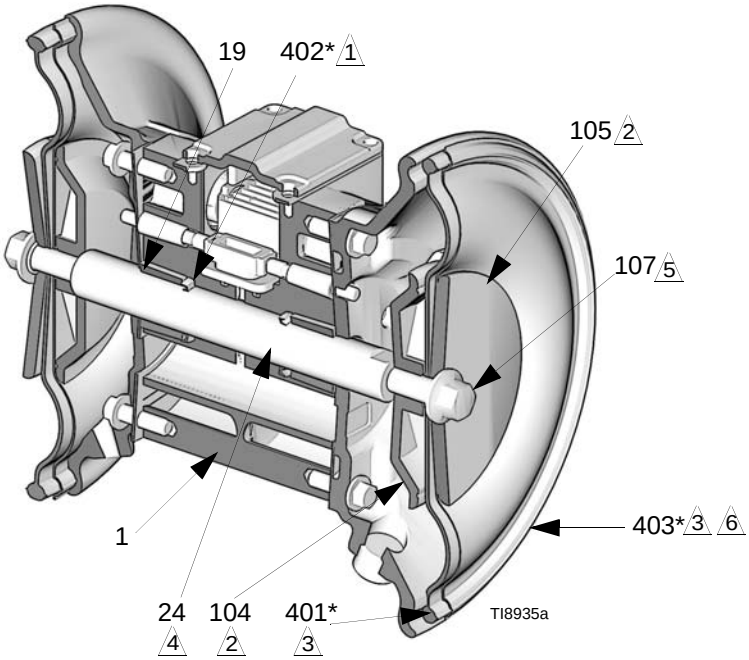

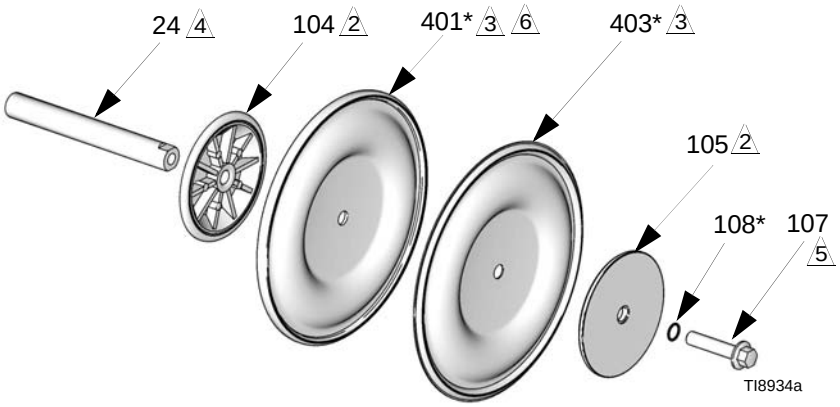

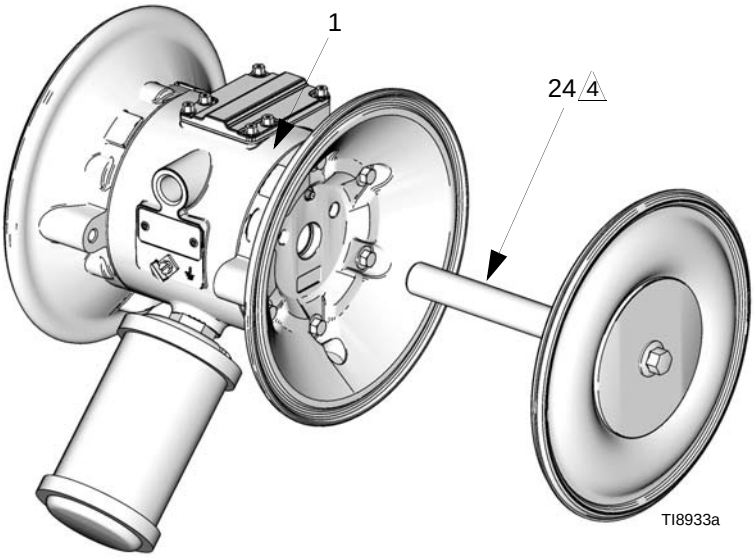

1 Lips face out of housing (1).

2 Rounded side faces diaphragm (401).

3 Air side must face center housing (1).

4 Grease.

5 Apply medium strength (blue) Loctite® or equivalent. Torque to 60-70 ft-lb (81-95 N•m) at 100 rpm maximum.

6 Backer used on pumps with PTFE diaphragms only.

FIG. 11

Overmolded Diaphragm Repair

NOTE: If your pump uses standard diaphragms, see page 18.

Tools Required

- Torque wrench
- 19 mm open end wrench
- O-ring pick
- Lithium-base grease

Disassembly

NOTE: A Fluid Section Repair Kit is available. Refer to page 25 or 31 to order the correct kit for your pump. Parts included in the kit are marked with an asterisk, for example (401*). Use all the parts in the kit for the best results.

1. Relieve the pressure.
2. Remove the manifolds and disassemble the ball check valves as explained on page 17.
3. Remove the clamps (106) holding the fluid covers (101) to the air covers (23). Pull the fluid covers (101) off the pump. See FIG. 12.
4. Once the fluid covers are removed, the diaphragm on the side of the pump which was last pressurized with air will be separated from the center section/air cover. This allows you to grip the diaphragms.
5. Diaphragms are assembled handtight. To loosen, grip both diaphragms securely around the outer edge and rotate counterclockwise. One diaphragm assembly will come free and the other will remain attached to the shaft. Remove the freed diaphragm (403) and air side plate (104).
6. Pull the opposite diaphragm assembly and shaft (24) out of the center housing (1). Hold the shaft flats with a 19 mm open end wrench and remove the diaphragm and air side plate from the shaft.
7. Inspect the diaphragm shaft (24) for wear or scratches. If it is damaged, inspect the bearings (19) in place. If the bearings are damaged, refer to page 23.
8. Reach into the center housing (1) with an o-ring pick and hook the u-cup packings (402), then pull them out of the housing. This can be done with the bearings (19) in place.
9. Clean all parts and inspect for wear or damage. Replace parts as needed.

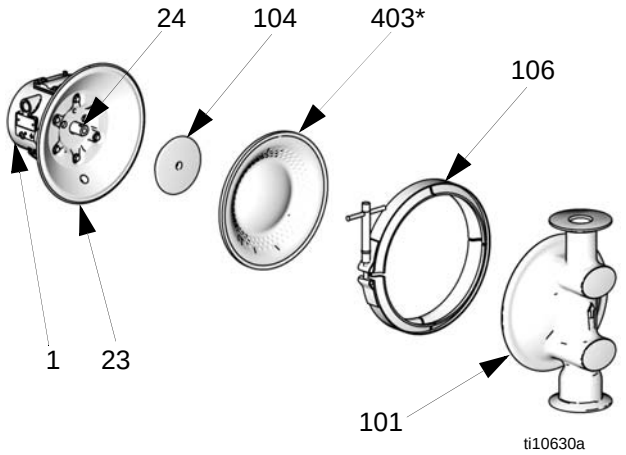

FIG. 12

Reassembly

To reduce the risk of serious injury, including amputation, do not put your fingers or hand between the air cover and the diaphragm.

1. Install the shaft u-cup packings (402*) so the lips face ***out*** of the housing (1). Lubricate the packings. See FIG. 13.

2. Assemble the air side plate (104) onto the diaphragm (403). The wide, radiused side of the plate must face the diaphragm. Apply medium-strength (blue) Loctite® or equivalent to the threads of the diaphragm assembly. Screw the assembly into the shaft (24) hand tight.

3. Grease the length and ends of the diaphragm shaft (24). Insert the shaft/diaphragm assembly into one side of the pump. Assemble the fluid cover (101) and clamp (106) so the arrow (A) on the cover faces the same direction as the air valve (B). Securely tighten the clamp.

4. Assemble the other diaphragm assembly to the shaft as explained in step 2. This diaphragm will be lifted off the air cover at this point.

5. Supply the pump with low pressure air (less than 7 psi [.05 MPa, 0.5 bar]). The diaphragm will very slowly pull onto the air cover (23). Find the pressure that keeps the diaphragm close enough to clamp, but does not let it contact the pilot pin.

NOTICE

Do not deform the diaphragm manually. The diaphragm needs uniform pressure to deform properly for maximum life.

6. Assemble the fluid cover (101) and clamp (106) so the arrow (A) on the cover faces the same direction as the air valve (B). Securely tighten the clamp.

NOTE: If the diaphragm contacts the pilot pin and is forced away from the air cover, try Step 5 again. If necessary, return to Step 3.

7. Reassemble the ball check valves and manifolds as explained on page 17.

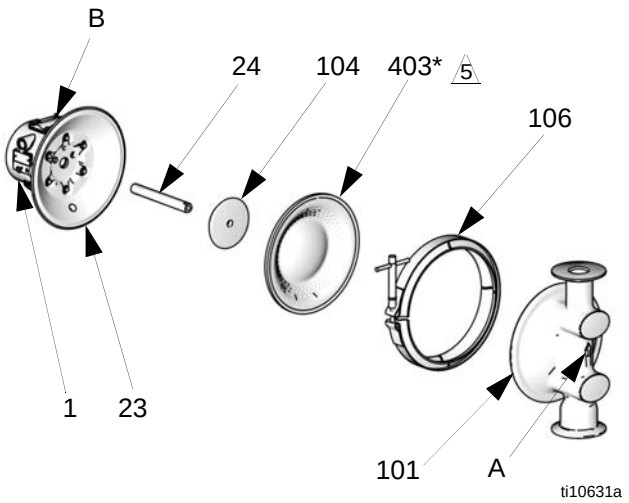

5 Apply medium strength (blue) Loctite® or equivalent to bolt (not shown).

FIG. 13

Bearing and Air Gasket Removal

Tools Required

- Torque wrench
- 10 mm socket wrench
- Bearing puller
- O-ring pick
- Press, or block and mallet

Disassembly

NOTE: Do not remove undamaged bearings.

1. Relieve the pressure.
2. Remove the manifolds and disassemble the ball check valves as explained on page 17.
3. Remove the fluid covers and diaphragm assemblies as explained on page 18.

NOTE: If you are removing only the diaphragm shaft bearing (19), skip step 4.

4. Disassemble the air valve as explained on page 15.
5. Using a 10 mm socket wrench, remove the screws (25) holding the air covers (23) to the center housing (1). See FIG. 14.
6. Remove the air cover gaskets (22). Always replace the gaskets with new ones.
7. Use a bearing puller to remove the diaphragm shaft bearings (19), air valve bearings (12) or pilot pin bearings (15). Do not remove undamaged bearings.
8. If you removed the diaphragm shaft bearings (19) reach into the center housing (1) with an o-ring pick and hook the u-cup packings (402), then pull them out of the housing. Inspect the packings. See FIG. 11.

Reassembly

1. If removed, install the shaft u-cup packings (402*) so the lips face ***out*** of the housing (1). See FIG. 11.
2. The bearings (12, 15, and 19) are tapered and can only be installed one way. Insert the bearings into the center housing (1), ***tapered end first***. Using a press or a block and rubber mallet, press-fit the bearing so it is flush with the surface of the center housing.
3. Reassemble the air valve as explained on page 15.
4. Align the new air cover gasket (22) so the pilot pin (16) protruding from the center housing (1) fits through the proper hole (H) in the gasket.
5. Align the air cover (23) so the pilot pin (16) fits in the middle hole (M) of the three small holes near the center of the cover. Install the screws (25), hand-tight. Apply medium-strength (blue) Loctite® or equivalent to the threads of the screws (25). See FIG. 14. Using a 10 mm socket wrench, torque the screws oppositely and evenly to 130-150 in-lb (15-17 N•m).
6. Install the diaphragm assemblies and fluid covers as explained on page 18.
7. Reassemble the ball check valves and manifolds as explained on page 17.

1 Insert bearings tapered end first

2 Press-fit bearings flush with surface of center housing (1)

3 Apply medium strength (blue) thread locker or equivalent. Torque to 130-150 in-lb (15-17 N•m)

Detail of air valve bearings

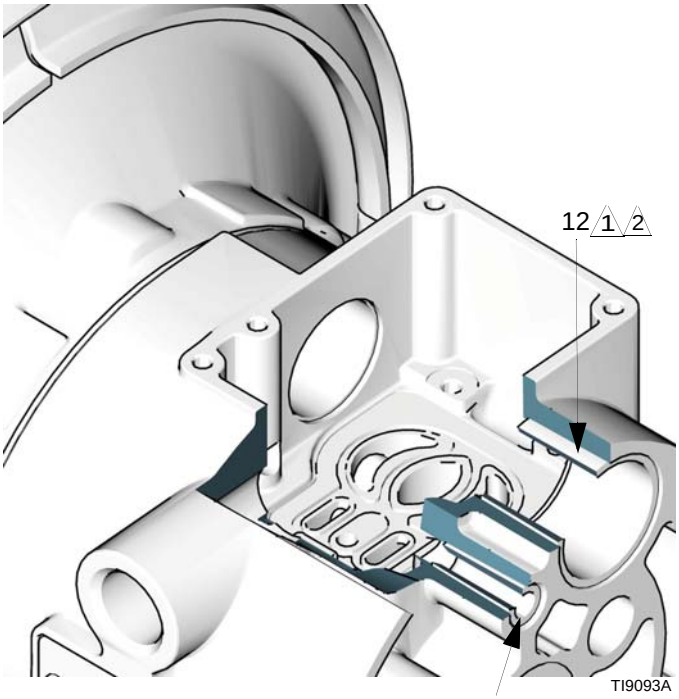

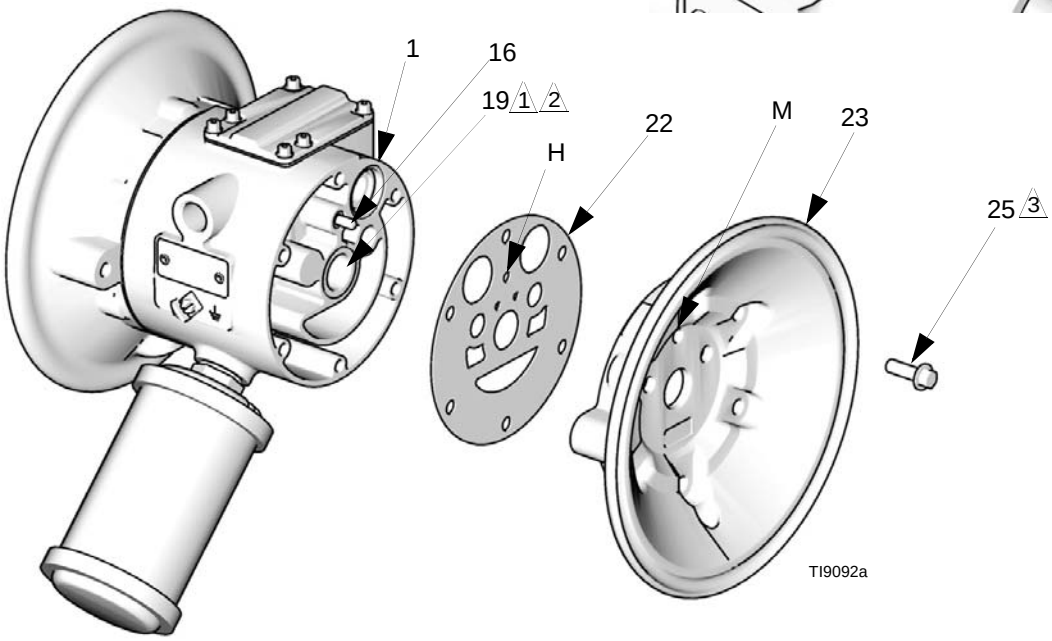

FIG. 14

Pump and Repair Kits - SPFG10 Models

To repair the air valve, order **Kit 400-002**. See page 27. Parts included in Kit are marked with †.

Available SPFG10 Configurations

Pump Model	Repair Kit	Description				
		Air Motor	Seats	O-rings	Balls	Diaphragms
SPFG10SSP	**400-020**	316 Stainless Steel	316 SST	PTFE	PTFE	PTFE
SPFG10SST	**400-021**		316 SST	PTFE	PTFE	PTFE Overmolded
SPFG10SSS	**400-022**		316 SST	PTFE	Santoprene	Santoprene

Parts - SPFG10 Models

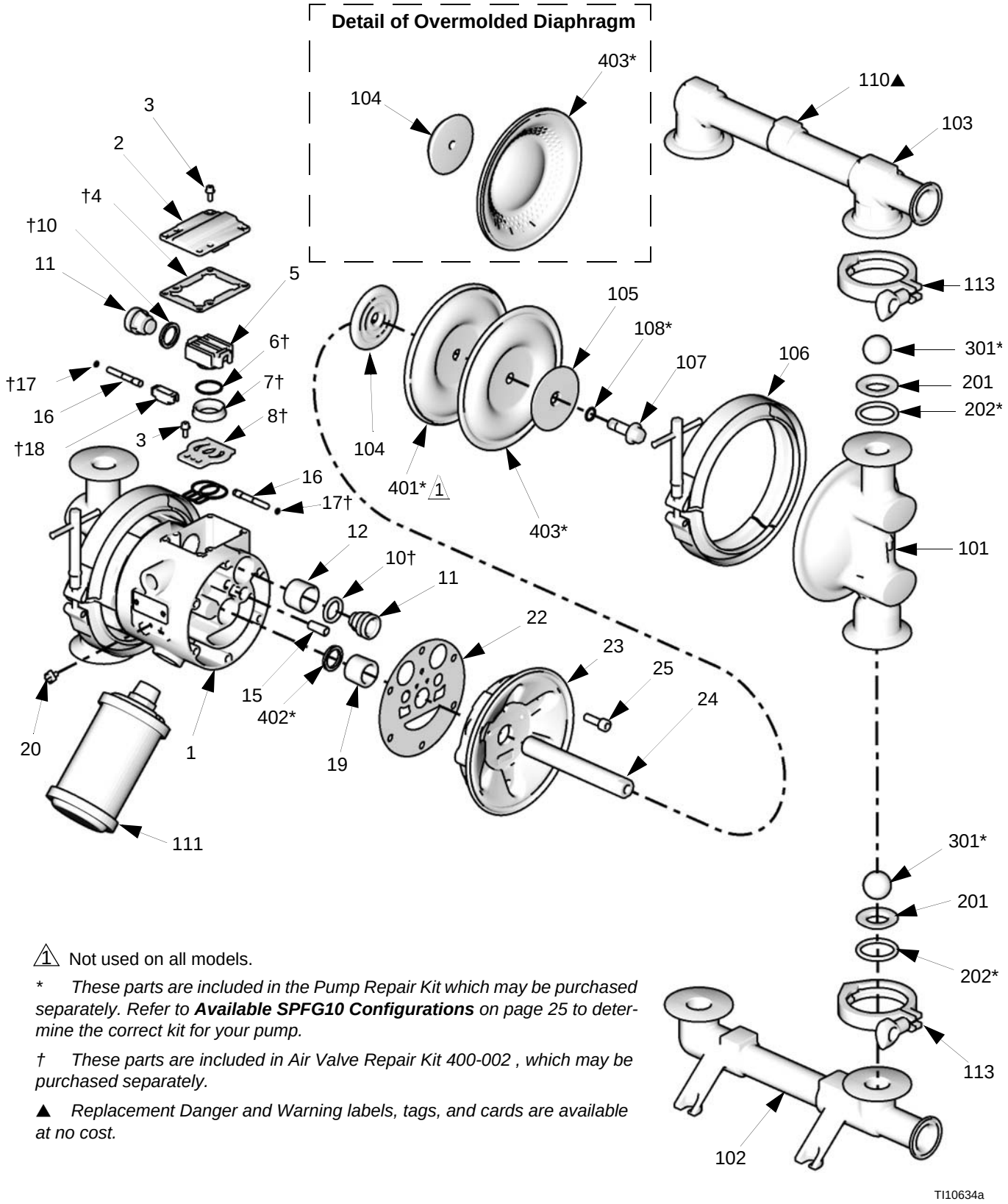

⚠1 Not used on all models.

* *These parts are included in the Pump Repair Kit which may be purchased separately. Refer to* ***Available SPFG10 Configurations*** *on page 25 to determine the correct kit for your pump.*

† *These parts are included in Air Valve Repair Kit 400-002 , which may be purchased separately.*

▲ *Replacement Danger and Warning labels, tags, and cards are available at no cost.*

Parts, SPFG10 Models, continued

Air Motor

Ref.	Part No.	Description	Qty
1	400-286	HOUSING, center; SST	1
2	400-289	COVER, air valve; SST	1
3	400-219	SCREW, mach, hex flange hd; M5 x 0.8; 12 mm (0.47 in.)	9
4†	400-234	GASKET, cover	1
5	400-236	CARRIAGE; aluminum	1
6†	400-203	O-RING; nitrile	1
7†	400-233	BLOCK, air valve; acetal	1
8†	400-279	PLATE, air valve; SST	1
10†	400-211	PACKING, u-cup; nitrile	2
11	400-230	PISTON, actuator; acetal	2
12	400-231	BEARING, piston; acetal	2
15	400-229	BEARING, pin; acetal	2
16	400-228	PIN, pilot; SST	2
17†	400-221	O-RING; buna-N	2
18†	400-232	BLOCK, pilot; acetal	1
19	400-227	BEARING, shaft; acetal	2
20	400-219	SCREW, grounding	1
22	400-223	GASKET, air cover; foam	2
23	400-275	COVER, air, SST	2
24	400-226	SHAFT, diaphragm; SST	1
25	400-210	SCREW; M8 x 1.25; 25 mm (1 in.); stainless steel	12

† These parts are included in Air Valve Repair Kit 400-002, which may be purchased separately.

Fluid Section

Ref.	Part No.	Description	Qty
101	400-259	COVER, fluid; SST	2
102	400-261	MANIFOLD, inlet; SST	1
103	400-262	MANIFOLD, outlet; SST	1
106	400-277	CLAMP, diaphragm	2
110▲	400-235	LABEL, warning	1
111	400-274	MUFFLER	1
113	400-270	CLAMP, sanitary	4
201	400-282	SEAT; 316 SST	4
202*	400-285	O-RING; PTFE	4
301*	400-208	BALL; PTFE	4
301*	400-209	BALL; Santoprene®	4

▲Replacement Danger and Warning labels, tags, and cards are available at no cost.

Diaphragm

	Ref.	Part No.	Description	Qty
PTFE	401*		DIAPHRAGM; backer; EPDM	2
	402*	400-211	PACKING; u-cup; nitrile	2
	403*	400-224	DIAPHRAGM; PTFE	2
	104	400-225	PLATE, air side; aluminum	2
	105	400-272	PLATE, fluid side; SST	2
	107	400-238	BOLT; M12 x 1.75; 35 mm (1.38 in.); SST	2
	108*	400-201	O-RING; PTFE	2
Santo-prene	402*	400-211	PACKING; u-cup; nitrile	2
	403*	400-237	DIAPHRAGM; Santoprene	2
	104	400-225	PLATE, air side; aluminum	2
	105	400-272	PLATE, fluid side; SST	2
	107	400-238	BOLT; M12 x 1.75; 35 mm (1.38 in.); SST	2
	108*	400-201	O-RING; PTFE	2
Over-molded PTFE	402*	400-211	PACKING; u-cup; nitrile	2
	403*	400-251	DIAPHRAGM; Over-molded; PTFE; includes two diaphragms and two packings (402)	1
	104	400-280	PLATE, air side; aluminum	2

** These parts are included in the Pump Repair Kit which may be purchased separately. Refer to **Available SPFG10 Configurations** on page 25 to determine the correct kit for your pump.*

Dimensional Drawing - SPFG10 Models

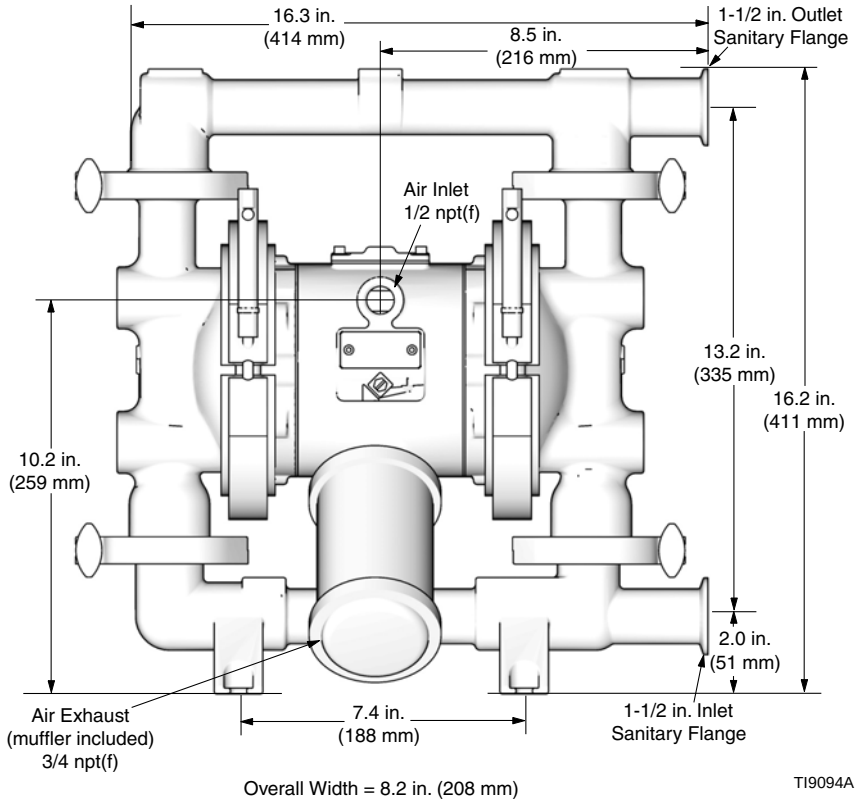

Pump Mounting Hole Pattern

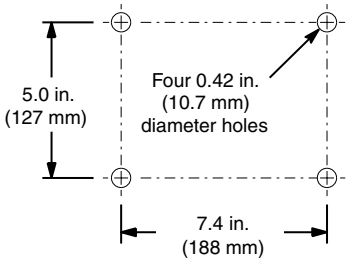

Technical Data - SPFG10 Models

Maximum fluid working pressure	120 psi (0.8 MPa, 8 bar)
Air pressure operating range	20-120 psi (0.14-0.8 MPa, 1.4-8 bar)
Maximum air consumption	50 scfm
Air consumption at 70 psi/20 gpm	18 scfm (see chart)
Maximum free-flow delivery	41 gpm (155.2 l/min)
Maximum pump speed	256 cpm
* Gallons (Liters) per cycle	0.16 (0.57)
Maximum suction lift	29 ft (8.83 m) wet, 16 ft (4.87 m) dry
Maximum size pumpable solids	1/8 in. (3.2 mm)
** Maximum Noise Level at 100 psi, full flow	92 dBa
** Sound Power Level	100 dBa
** Noise Level at 70 psi and 50 cpm	73 dBa
Maximum fluid operating temperature is based on the following maximum diaphragm, ball, and seat temperature ratings.	PTFE 220°F (104.4°C) Santoprene® 180°F (82.2°C) Stainless steel 250°F (121.1°C)
Air inlet size	0.5 in. npt(f)
Fluid inlet size	1.5 in. sanitary flange
Fluid outlet size	1.5 in. sanitary flange

Wetted parts
***All fluid contact materials are FDA-compliant and meet the United States Code of Federal Regulations (CFR) Title 21, Section 177.

Wetted materials on all models	316 SST
Wetted materials depending on model	PTFE, Santoprene®

CAUTION:
Santoprene® may be used only with non-fatty, non-oily foods or alcohols up to 15%.

Non-wetted external parts	300 series stainless steel, polyester (labels), LDPE foam (gasket)
Weight	55 lb. (24.9 kg)

Santoprene® is a registered trademark of the Monsanto Co.

* *Displacement per cycle may vary based on suction condition, discharge head, air pressure, and fluid type.*

** *Noise levels measured with the pump mounted to a solid surface. Sound power measured per ISO Standard 9614-1.*

*** *The pump user must verify that the construction materials meet their specific application requirements.*

Performance Chart - SPFG10 Models

Test Conditions: Pump tested in water with inlet submerged

Fluid Pressure Curves

A at 120 psi (0.7 MPa, 7 bar) operating air pressure
B at 100 psi (0.7 MPa, 7 bar) operating air pressure
C at 70 psi (0.48 MPa, 4.8 bar) operating air pressure
D at 40 psi (0.28 MPa, 2.8 bar) operating air pressure

To find Fluid Outlet Pressure
(psi/MPa/bar) at a specific fluid flow (gpm/lpm) and operating air pressure (psi/MPa/bar):

1. Locate fluid flow rate along bottom of chart.
2. Follow vertical line up to intersection with selected operating air pressure curve.
3. Follow left to scale to read fluid outlet pressure.

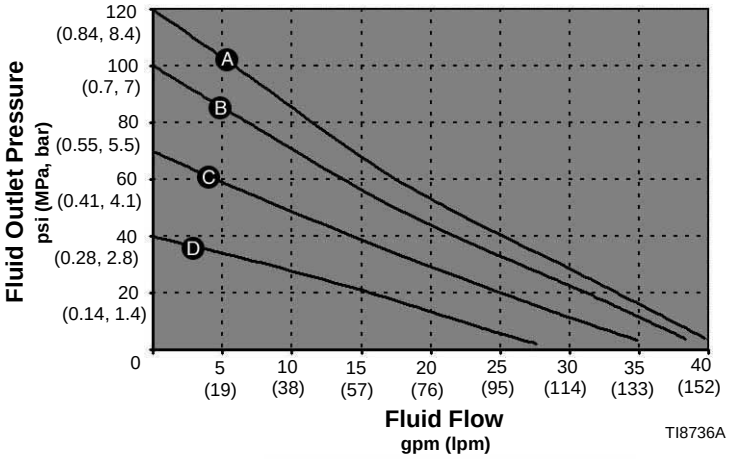

AIR PRESSURES
Ⓐ = @ 120 psi (8.4 bar, 0.84 MPa)
Ⓑ = @ 100 psi (7.0 bar, 0.7 MPa)
Ⓒ = @ 70 psi (4.8 bar, 0.5 MPa)
Ⓓ = @ 40 psi (2.8 bar, 0.3 MPa)

TI8742A

Air Consumption Curves

A at 120 psi (0.7 MPa, 7 bar) operating air pressure
B at 100 psi (0.7 MPa, 7 bar) operating air pressure
C at 70 psi (0.48 MPa, 4.8 bar) operating air pressure
D at 40 psi (0.28 MPa, 2.8 bar) operating air pressure

To find Pump Air Consumption
(scfm or m^3/min) at a specific fluid flow (gpm/lpm) and operating air pressure (psi/MPa/bar):

1. Locate fluid flow rate along bottom of chart.
2. Read vertical line up to intersection with selected operating air pressure curve.

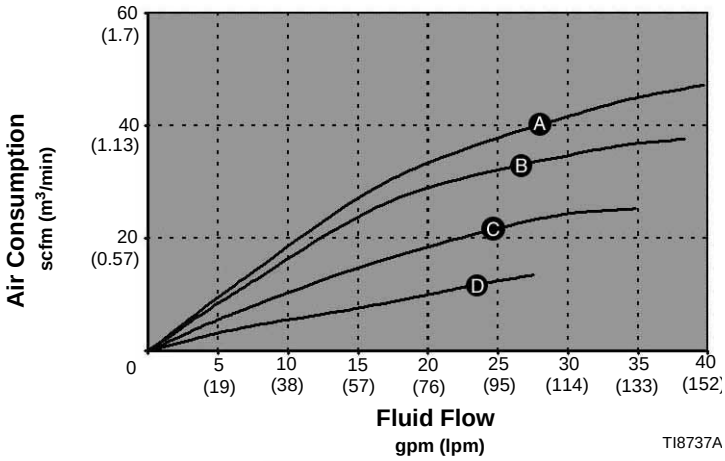

AIR PRESSURES
Ⓐ = @ 120 psi (8.4 bar, 0.84 MPa)
Ⓑ = @ 100 psi (7.0 bar, 0.7 MPa)
Ⓒ = @ 70 psi (4.8 bar, 0.5 MPa)
Ⓓ = @ 40 psi (2.8 bar, 0.3 MPa)

TI8742A

Pump and Repair Kits - SPFG15 Models

To repair the air valve, order **Kit 400-002**. See page 33. Parts included in the kit are marked with †.

Available SPFG15 Configurations

Pump Model	Repair Kit	Description				
		Air Motor	Seats	O-rings	Balls	Diaphragms
SPFG15SSP	**400-030**	316 Stainless Steel	316 SST	PTFE	PTFE	PTFE
SPFG15SST	**400-031**		316 SST	PTFE	PTFE	PTFE Overmolded
SPFG15SSS	**400-032**		316 SST	PTFE	Santoprene	Santoprene

Parts - SPFG15 Models

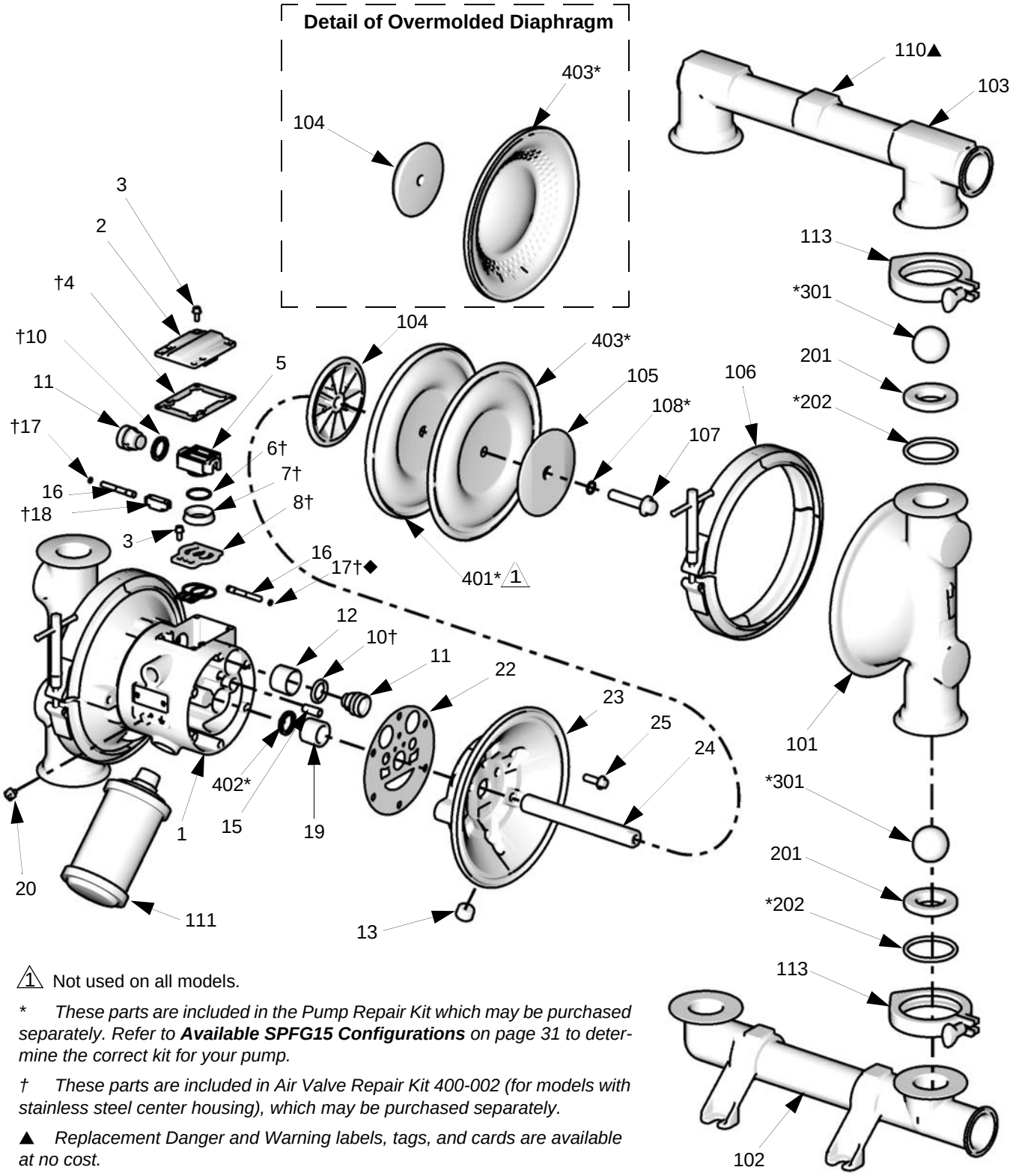

△1 Not used on all models.

* *These parts are included in the Pump Repair Kit which may be purchased separately. Refer to* ***Available SPFG15 Configurations*** *on page 31 to determine the correct kit for your pump.*

† *These parts are included in Air Valve Repair Kit 400-002 (for models with stainless steel center housing), which may be purchased separately.*

▲ *Replacement Danger and Warning labels, tags, and cards are available at no cost.*

TI8927b

Parts, SPFG15 Models, continued

Air Motor

Ref	Part No.	Description	Qty
1	400-286	HOUSING, center; SST	1
2	400-289	COVER, air valve; SST	1
3	400-219	SCREW, mach, hex flange hd; M5 x 0.8; 12 mm (0.47 in.)	9
4†	400-234	GASKET, cover;	1
5	400-236	CARRIAGE; aluminum	1
6†	400-203	O-RING; nitrile	1
7†	400-233	BLOCK, air valve; acetal	1
8†	400-279	PLATE, air valve; SST	1
10†	400-211	PACKING, u-cup; nitrile	2
11	400-230	PISTON, actuator; acetal	2
12	400-231	BEARING, piston; acetal	2
13	400-200	PLUG, pipe	2
15	400-229	BEARING, pin; acetal	2
16	400-228	PIN, pilot; SST	2
17†	400-221	O-RING; buna-N	2
18†	400-232	BLOCK, pilot; acetal	1
19	400-227	BEARING, shaft; acetal	2
20	400-219	SCREW, grounding	1
22	400-223	GASKET, air cover; foam	2
23	400-276	COVER, air; SST	2
24	400-239	SHAFT, diaphragm; SST	1
25	400-210	SCREW; M8 x 1.25; 25 mm (1 in.); stainless steel	12

† *These parts are included in Air Valve Repair Kit 400-002 , which may be purchased separately.*

Fluid Section

Ref	Part No	Description	Qty
101	400-260	COVER, fluid; SST	2
102	400-263	MANIFOLD, inlet; SST	1
103	400-264	MANIFOLD, outlet; SST	1
106	400-278	CLAMP, diaphragm	2
110▲	400-235	LABEL, warning	1
111	400-274	MUFFLER	1
113	400-273	CLAMP, sanitary	4
201	400-283	SEAT; 316 sst	4
202	400-284	O-RING; PTFE	4
301	400-212	BALL; PTFE	4
301	400-213	BALL; Santoprene®	4

▲ *Replacement Danger and Warning labels, tags and cards are available at no cost.*

Diaphragm

	Ref	Part No.	Description	Qty
PTFE	401*		DIAPHRAGM; backer; EPDM	2
	402*	400-211	PACKING; u-cup; nitrile	2
	403*	400-287	DIAPHRAGM; PTFE	2
	104	400-288	PLATE, air side; aluminum	2
	105	400-240	PLATE, fluid side; SST	2
	107	400-241	BOLT; M12 x 1.75; 35 mm (1.38 in.); SST	2
	108*	400-201	O-RING; PTFE	2
Santo-prene	402*	400-211	PACKING; u-cup; nitrile	2
	403*	400-242	DIAPHRAGM; Santo-prene®	2
	104	400-288	PLATE, air side; aluminum	2
	105	400-240	PLATE, fluid side; SST	2
	107	400-241	BOLT; M12 x 1.75; 35 mm (1.38 in.); SST	2
	108*	400-201	O-RING; PTFE	2
Over-molded PTFE	402*	400-211	PACKING; u-cup; nitrile	2
	403*	400-252	DIAPHRAGM; Over-molded; PTFE; includes two diaphragms and two packings (402)	1
	104	400-281	PLATE, air side; aluminum	2

* *These parts are included in the Pump Repair Kit which may be purchased separately. Refer to* ***Available SPFG15 Configurations*** *on page 31 to determine the correct kit for your pump.*

Dimensional Drawing - SPFG15 Models

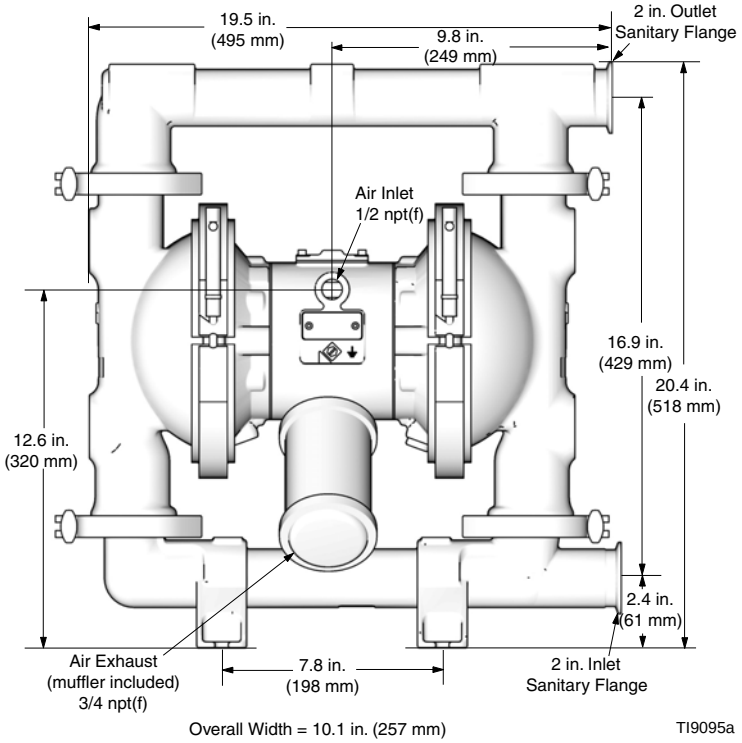

Pump Mounting Hole Pattern

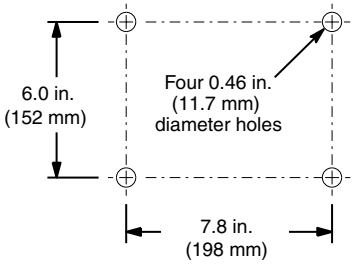

Technical Data - SPFG15 Models

Maximum fluid working pressure	120 psi (0.8 MPa, 8 bar)
Air pressure operating range	20-120 psi (0.14-0.8 MPa, 1.4-8 bar)
Maximum air consumption	130 scfm
Air consumption at 70 psi/50 gpm	42 scfm (see chart)
Maximum free-flow delivery	100 gpm (379 l/min)
Maximum pump speed	200 cpm
* Gallons (Liters) per cycle	0.5 (1.9)
Maximum suction lift	29 ft (8.83 m) wet, 14 ft (4.26 m) dry
Maximum size pumpable solids	3/16 in. (4.8 mm)
** Maximum Noise Level at 100 psi, full flow	88 dBa
** Sound Power Level	95 dBa
** Noise Level at 70 psi and 50 cpm	79 dBa
Maximum fluid operating temperature is based on the following maximum diaphragm, ball, and seat temperature ratings.	PTFE 220°F (104.4°C) Santoprene® 180°F (82.2°C) Stainless steel 250°F (121.1°C)
Air inlet size	0.5 in. npt(f)
Fluid inlet size	2.0 in. Sanitary flange
Fluid outlet size	2.0 in. Sanitary flange

Wetted parts
***All fluid contact materials are FDA-compliant and meet the United States Code of Federal Regulations (CFR) Title 21, Section 177.

Wetted materials on all models	316 SST
Wetted material depending on model	PTFE, Santoprene®

CAUTION:
Santoprene® may be used only with non-fatty, non-oily foods or alcohols up to 15%.

Non-wetted external parts	300 series stainless steel, polyester (labels), LDPE foam (gasket)
Weight	89 lb (40.3 kg)

Santoprene® is a registered trademark of the Monsanto Co.

* *Displacement per cycle may vary based on suction condition, discharge head, air pressure, and fluid type.*

** *Noise levels measured with the pump mounted to a solid surface. Sound power measured per ISO Standard 9614-1.*

*** *The pump user must verify that the construction materials meet their specific application requirements.*

Performance Chart - SPFG15 Models

Test Conditions: Pump tested in water with inlet submerged

Fluid Pressure Curves

A at 120 psi (0.7 MPa, 7 bar) operating air pressure
B at 100 psi (0.7 MPa, 7 bar) operating air pressure
C at 70 psi (0.48 MPa, 4.8 bar) operating air pressure
D at 40 psi (0.28 MPa, 2.8 bar) operating air pressure

To find Fluid Outlet Pressure
(psi/MPa/bar) at a specific fluid flow (gpm/lpm) and operating air pressure (psi/MPa/bar):

1. Locate fluid flow rate along bottom of chart.
2. Follow vertical line up to intersection with selected operating air pressure curve.
3. Follow left to scale to read fluid outlet pressure.

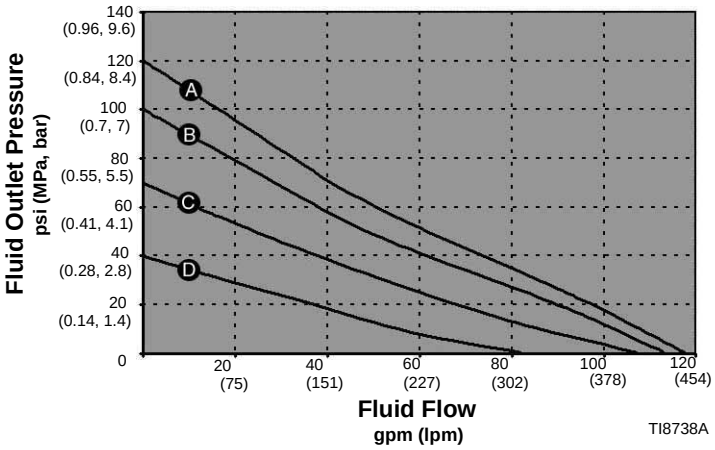

AIR PRESSURES
Ⓐ = @ 120 psi (8.4 bar, 0.84 MPa)
Ⓑ = @ 100 psi (7.0 bar, 0.7 MPa)
Ⓒ = @ 70 psi (4.8 bar, 0.5 MPa)
Ⓓ = @ 40 psi (2.8 bar, 0.3 MPa)
TI8742A

Air Consumption Curves

A at 120 psi (0.7 MPa, 7 bar) operating air pressure
B at 100 psi (0.7 MPa, 7 bar) operating air pressure
C at 70 psi (0.48 MPa, 4.8 bar) operating air pressure
D at 40 psi (0.28 MPa, 2.8 bar) operating air pressure

To find Pump Air Pressure
(scfm or m^3/min) at a specific fluid flow (gpm/lpm) and operating air pressure (psi/MPa/bar):

1. Locate fluid flow rate along bottom of chart.
2. Read vertical line up to intersection with selected operating air pressure.
3. Follow left to scale to read air consumption.

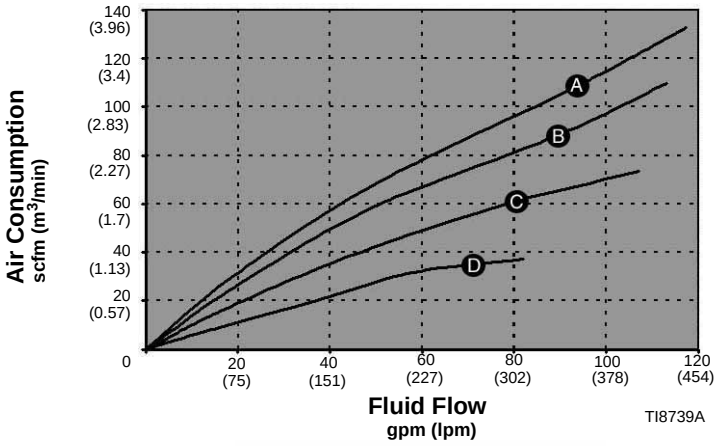

AIR PRESSURES
Ⓐ = @ 120 psi (8.4 bar, 0.84 MPa)
Ⓑ = @ 100 psi (7.0 bar, 0.7 MPa)
Ⓒ = @ 70 psi (4.8 bar, 0.5 MPa)
Ⓓ = @ 40 psi (2.8 bar, 0.3 MPa)
TI8742A

DECLARATION OF COMPLIANCE

Statement of compliance with European Union regulation (EC) no 1935/2004 on materials and articles intended to come into contact with food
Requirement per Article 16 of EC 1935/2004

Standard Pump declares that the equipment listed below contains materials that have been demonstrated to meet the requirements of Regulations**: EC 1935/2004** of 27 October 2004 and **EC 2023/2006** of 22 December 2006

Model Standard Pump SPFG1XSSX Diaphragm Pump

Part No SPFG10SSP, SPFG10SST, SPFG15SSP, SPFG15SST

Materials used in this equipment that are intended to contact food belong to the groups of materials listed in Annex 1 (EC) 1935/2004 *(List of groups of materials and articles which may be covered by specific measures)*

- ☐ Adhesives (2)
- ☐ Ceramics (3)
- ☒ Rubbers (5)
- ☒ Metals and Alloys (8)
- ☒ Plastics (10)
- ☐ Printing Inks (11)
- ☐ Silicones (13)
- ☐ Varnishes and Coatings (15)

Materials used in this equipment that are intended to contact food were assessed using one or more of the regulations and/or texts referenced in ANNEX 1 of this declaration. Compliance is subject to material and equipment storage, handling and usage recommended by the equipment instruction manual, and supplemental technical publications published by Standard Pump.

The establishment of this declaration is based on the following:

- ☒ Statements of raw material suppliers
- ☒ Analysis of global migration
- ☒ Analysis of materials is subject to limitations (Listed in ANNEX 2)
- ☐ Other (Listed in ANNEX 3)

Standard Pump will make available to the competent authorities appropriate documentation to demonstrate this compliance.

APPROVED BY:

Christopher Murphy
Director of Operations

Date: **05 DEC 2016**

Manufactured By:
Standard Pump, Inc.

1610 Satellite Blvd., Suite D

Duluth, GA 30097

Part Number:	Rev
199634	A

FCD-0645 Rev2

Page **1** of **2**

ANNEX 1 TO DECLARATION OF COMPLIANCE
References and Regulations Used

All Materials:

Framework Regulation (EC) No 1935/2004 of the European Parliament and of the Council of 27 October 2004 on materials and articles in tended to come into contact with food and repealing Directives 80/590/EEC and 89/109 EEC

Commission Regulation (EC) No 2023/2006 of 22 December 2006 on good manufacturing practices for materials and articles intended to come into contact with food

Metals and Alloys:

Technical Document – Guidelines on Metals and Alloys Used as Food Contact Materials (09.03.2001)

Plastics:

Commission Regulation (EU) No 10/2011 on plastic materials and articles intended to come into contact with food

Commission Regulation (EU) No 1282/2011 amending and correcting Commission Regulation (EU) No 10/2011 on plastic materials and articles intended to come into contact with food

Rubber and Elastomers:

Council of Europe Committee of Ministers Resolution ResAP(2004)4 on rubber products intended to come into contact with foodstuffs

US Food and Drug Administration 21 CFR Ch.1 Title 177.26 Rubber Articles Intended for Repeated Use.

ANNEX 2 TO DECLARATION OF COMPLIANCE
Analysis of Materials Subject to Limitations

The following wetted parts have special conditions for use and are therefore subject to the following limitations.

Part No	Description	Limitation
400-251	OVERMOLD DIAPHRAM	Contact not to exceed 24 hours for temps above 85°C
400-252	OVERMOLD DIAPHRAM	Contact not to exceed 24 hours for temps above 85°C

All wetted parts and/or materials used in this product have not been tested under all conditions using all simulants. It is the responsibility of the end user to assure compliance under the specific conditions used by the end user.

ANNEX 3 TO DECLARATION OF COMPLIANCE
Other Items Used to Establish this Declaration

None

Date: **05 DEC 2016**

Part Number:	Rev
199634	A

FCD-0645 Rev2

Page **2** of **2**

EU-DECLARATION OF CONFORMITY

EU-CONFORMITEITSVERKLARING, DÉCLARATION UE DE CONFORMITÉ, EU-KONFORMITÄTSERKLÄRUNG DICHIARAZIONE DI CONFORMITÀ UE, EU-OVERENSSTEMMELSESERKLÆRING, ΔΉΛΩΣΗ ΣΥΜΜΟΡΦΩΣΗΣ ΕΕ, DECLARAÇÃO UE DE CONFORMIDADE, DECLARACIÓN UE DE CONFORMIDAD, EU-VAATIMUSTENMUKAISUUSVAKUUTUS, EU-FÖRSÄKRAN OM ÖVERENSSTÄMMELSE, EU PROHLÁŠENÍ O SHODĚ, ELI VASTAVUSDEKLARATSIOON, EU-MEGFELELŐSÉGI NYILATKOZAT, ES ATBILSTĪBAS DEKLARĀCIJA, ES ATITIKTIES DEKLARACIJA DEKLARACJA ZGODNOŚCI UE, DIKJARAZZJONI TA' KONFORMITÀ TAL-UE, EU IZJAVA O SUKLADNOSTI, EÚ VYHLÁSENIE O ZHODE, ЕС ДЕКЛАРАЦИЯ ЗА СЪОТВЕТСТВИЕ, DECLARAȚIA UE DE CONFORMITATE

Model
Modèle, Modell, Modello, Μοντέλο, Modelo, Malli, Mudel, Modelis, Mudell, Модел, Samhail

SPFG1XSSX Diaphragm Pump

Part
Bestelnr., Type, Teil, Codice, Del, Μέρος, Peça, Referencia, Osa, Součást, Részegység, Daļa, Dalis, Część, Taqsima, Časť, Част, Páirt, Parte

SPFG10SSP, SPFG10SSS, SPFG10SST, SPFG15SSP, SPFG15SSS, SPFG15SST

Complies With The EC Directives:

Voldoet aan de EG-richtlijnen, Conforme aux directives CE, Entspricht den EG-Richtlinien, Conforme alle direttive CE, Overholder EF-direktiverne, Σύμφωνα με τις Οδηγίες της ΕΚ, Em conformidade com as Directivas CE, Cumple las directivas de la CE, Täyttää EY-direktiivien vaatimukset, Uppfyller EG-direktiven, Shoda se směrnicemi ES, Vastab EÜ direktiividele, Kielégíti az EK irányelvek követelményeit, Atbilst EK direktīvām, Atitinka šias ES direktyvas, Zgodność z Dyrektywami UE, Konformi mad-Direttivi tal-KE, V skladu z direktivami ES, Je v súlade so smernicami ES, Съвместимост с Директиви на ЕО, Tá ag teacht le Treoracha an CE, Respectă directivele CE

2006/42/EC Machinery Directive

2014/34/EU Atex Directive (Ex II 2 G c T6) – Tech File 0489 stored with NB 0359.

Standards Used:

Gebruikte maatstaven, Normes respectées , Verwendete Normen, Norme applicate, Anvendte standarder , Πρότυπα που χρησιμοποιήθηκαν, Normas utilizadas, Normas aplicadas, Sovellettavat standardit, Tillämpade standarder, Použité normy, Rakendatud standardid, Alkalmazott szabványok, Izmantotie standarti, Taikyti standartai, Użyte normy, Standards Užati, Uporabljeni standardi, Použité normy, Използвани стандарти, Caighdeáin arna n-úsáid , Standarde utilizate

ISO 12100	ISO 9614-1	
EN 1127-1	EN 13463-1	EN1672-2, ISO 14159

Notified Body for Directive

Aangemelde instantie voor richtlijn , Organisme notifié pour la directive , Benannte Stelle für diese Richtlinie, Ente certificatore della direttiva, Bemyndiget organ for direktiv , Διακοινωμένο όργανο Οδηγίας, Organismo notificado relativamente à directiva, Organismo notificado de la directiva, Direktiivin mukaisesti ilmoitettu tarkastuslaitos, Anmält organ för direktivet, Úředně oznámený orgán pro směrnici, Teavitatud asutus (direktiivi järgi), Az irányelvvel kapcsolatban értesített testület, Pilnvarotā iestāde saskaņā ar direktīvu, Apie direktyvą Informuota institucija, Ciało powiadomione dla Dyrektywy, Korp avżat bid-Direttiva, Priglašeni organ za direktivo, Notifikovaný orgán pre smernicu, Нотифициран орган за Директива, Comhlacht ar tugadh fógra dó , Organism notificat în conformitate cu directiva

Approved By:

Goedgekeurd door, Approuvé par, Genehmigt von, Approvato da, Godkendt af , Έγκριση από, Aprovado por, Aprobado por, Hyväksynyt, Intygas av, Schválil, Kinnitanud, Jóváhagyta, Apstiprināts, Patvirtino, Zatwierdzone przez, Approvat minn, Odobril, Schválené, Одобрено от, Faofa ag, Aprobat de

Christopher Murphy
Director of Operations

05 DEC 2016

Manufactured By:
Standard Pump, Inc.
1610 Satellite Blvd., Suite D

Duluth, GA 30097

199629	A

This declaration of conformity is issued under the sole responsibility of the manufacturer. Deze conformiteitsverklaring wordt verstrekt onder volledige verantwoordelijkheid van de fabrikant. La présente déclaration de conformité est établie sous la seule responsabilité du fabricant. Die alleinige Verantwortung für die Ausstellung dieser Konformitätserklärung trägt der Hersteller. La presente dichiarazione di conformità è rilasciata sotto la responsabilità esclusiva del fabbricante. Denne overensstemmelseserklæring udstedes på fabrikantens ansvar. Η παρούσα δήλωση συμμόρφωσης εκδίδεται με αποκλειστική ευθύνη του κατασκευαστή. A presente declaração de conformidade é emitida sob a exclusiva responsabilidade do fabricante. La presente declaración de conformidad se expide bajo la exclusiva responsabilidad del fabricante. Tämä vaatimustenmukaisuusvakuutus on annettu valmistajan yksinomaisella vastuulla. Denna försäkran om överensstämmelse utfärdas på tillverkarens eget ansvar. Toto prohlášení o shodě se vydává na výhradní odpovědnost výrobce. Käesolev vastavusdeklaratsioon on välja antud tootja ainuvastutusel. Ezt a megfelelőségi nyilatkozatot a gyártó kizárólagos felelőssége mellett adják ki. Šī atbilstības deklarācija ir izdota vienīgi uz ražotāja atbildību. Ši atitikties deklaracija išduota tik gamintojo atsakomybe. Niniejsza deklaracja zgodności wydana zostaje na wyłączną odpowiedzialność producenta. Din id-dikjarazzjoni tal-konformità qiegħda tinħareġ taħt ir-responsabbiltà unika tal-manifattur. Ta izjava o skladnosti je izdana na lastno odgovornost proizvajalca. Toto vyhlásenie o zhode sa vydáva na výhradnú zodpovednosť výrobcu. Настоящата декларация за съответствие е издадена на отговорността на производителя: Prezenta declarație de conformitate este emisă pe răspunderea exclusivă a producătorului.

Standard Pump Warranty

Standard Pump warrants all equipment manufactured by Standard Pump and bearing its name to be free from defects in material and workmanship on the date of sale to the original purchaser for use. With the exception of any special, extended, or limited warranty published by Standard Pump, Standard Pump will, for a period of three years from the date of sale, repair or replace any part of the equipment determined by Standard Pump to be defective. This warranty applies only when the equipment is installed, operated and maintained in accordance with Standard Pump's written recommendations.

This warranty does not cover, and Standard Pump shall not be liable for general wear and tear, or any malfunction, damage or wear caused by faulty installation, misapplication, abrasion, corrosion, inadequate or improper maintenance, negligence, accident, tampering, or substitution of non-Standard Pump component parts. Nor shall Standard Pump be liable for malfunction, damage or wear caused by the incompatibility of Standard Pump equipment with structures, accessories, equipment or materials not supplied by Standard Pump, or the improper design, manufacture, installation, operation or maintenance of structures, accessories, equipment or materials not supplied by Standard Pump.

This warranty is conditioned upon the prepaid return of the equipment claimed to be defective to an authorized Standard Pump distributor for verification of the claimed defect. If the claimed defect is verified, Standard Pump will repair or replace free of charge any defective parts. The equipment will be returned to the original purchaser transportation prepaid. If inspection of the equipment does not disclose any defect in material or workmanship, repairs will be made at a reasonable charge, which charges may include the costs of parts, labor, and transportation.

THIS WARRANTY IS EXCLUSIVE, AND IS IN LIEU OF ANY OTHER WARRANTIES, EXPRESS OR IMPLIED, INCLUDING BUT NOT LIMITED TO WARRANTY OF MERCHANTABILITY OR WARRANTY OF FITNESS FOR A PARTICULAR PURPOSE.

Standard Pump's sole obligation and the buyer's sole remedy for any breach of warranty shall be as set forth above. The buyer agrees that no other remedy (including, but not limited to, incidental or consequential damages for lost profits, lost sales, injury to person or property, or any other incidental or consequential loss) shall be available. Any action for breach of warranty must be brought within six years of the date of sale.

Standard Pump makes no warranty, and disclaims all implied warranties of merchantability and fitness for a particular purpose in connection with accessories, equipment, materials or components sold but not manufactured by Standard Pump. These items sold, but not manufactured by Standard Pump (such as electric motors, switches, hose, etc.), are subject to the warranty, if any, of their manufacturer. Standard Pump will provide purchaser with reasonable assistance in making any claim for breach of these warranties.

In no event will Standard Pump be liable for indirect, incidental, special or consequential damages resulting from Standard Pump supplying equipment hereunder, or the furnishing, performance, or use of any products or other goods sold hereto, whether due to a breach of contract, breach of warranty, the negligence of Standard Pump, or otherwise.

Standard Pump Information

For the latest information about Standard Pump products, visit www.standardpump.com.

TO PLACE AN ORDER, contact your Standard Pump distributor or call to identify the nearest distributor.
Phone: 770-307-1003 **or Toll Free:** 1-866-558-8611 **Fax:** 770-307-1009

All written and visual data contained in this document reflects the latest product information available at the time of publication. Standard Pump reserves the right to make changes at any time without notice.

Original instructions. This manual contains English. MM 3A4551

STANDARD PUMP
1610 Satellite Blvd. Suite D., Duluth, Georgia 30097 USA

info@standardpump.com
www.standardpump.com
Revision A, December 2016